PULSED POWER SUPPLY 2000 A 300 VDC

REV.	MODIFIC.	DATA DATE	FIRMA SIGNATURE	APPROV. APPROVED	G.TADDIA
005	AS BUILT	21/12/17	CC	CHECKED	S.TENCONI
006	AS BUILT UPDATED	11/01/18	CC	DISEGN. DESIGNED	C.CASSANI
				DATA DATE	04/07/2017

CLIENTE CUSTOMER: ENEA PROTO-SPHERA

OCEM®

UNI EN ISO 9001 Cert. 9115 OCEM

QUESTA COPIA NON E' FIRMATA PERCHE' REGISTRATA E DISTRIBUITA TRAMITE SISTEMA AUTOMATICO DI GESTIONE DEL PATRIMONIO INFORMATIVO (PUO' ESSERE FIRMATA A RICHIESTA)
THIS COPY IS NOT SIGNED SINCE IT IS FILED AND DELIVERED BY MEANS OF THE AUTOMATIC KNOWLEDGE MANAGEMENT SYSTEM (IT CAN BE SIGNED ON REQUEST)
QUESTO DOCUMENTO E' PROPRIETA' RISERVATA DELLA OCEM ENERGY TECHNOLOGY IL SUO CONTENUTO NON PUO' ESSERE DIVULGATO NE' MODIFICATO SENZA IL CONSENSO SCRITTO DELLA OCEM ENERGY TECHNOLOGY
THIS DOCUMENT BELONGS TO OCEM ENERGY TECHNOLOGY ITS CONTENT CANNOT BE DIVULGED OR MODIFIED WITHOUT WRITTEN APPROVAL OF OCEM ENERGY TECHNOLOGY

OGGETTO SUBJECT: PULSED POWER SUPPPLY 2000 A 300 VDC
TITLE

DISEGNO N. DRAWING N.: 078.5307.0

FORM. S.SIZE: A3

FOGLIO SHEET: 1 DI OF 25

ELECTRICAL DIAGRAM

SUBJECT: PULSED POWER SUPPLY 2000 A 300 VDC		
OCEM CODE: 078.5307		
DRAWING NR.: 078.5307.0		
MAIN INPUT VOLTAGE:		
Vn =	1P+N 230 VAC - 50 Hz	(SHEET NR. 6)
OUPUT:		
Vn =	48-96 VDC	(SHEET NR. 8)
Vmax =	300 VDC	
Imax =	2 kA	
Pn =	50 kW (1,5 sec.)	

				DATA DATE	04/07/2017	CLIENTE CUSTOMER	ENEA PROTO-SPHERA	
006	AS BUILT UPDATED	11/01/18	CC	DISEGN. DESIGNED	C.CASSANI			
005	AS BUILT	21/12/17	CC	CONTROL. CHECKED	S.TENCONI			
REV.	MODIFIC.	DATA DATE	FIRMA SIGNATURE	APPROV. APPROVED	G.TADDIA	OCEM®	UNI EN ISO 9001 Cert. 9115 OCEM	OGGETTO SUBJECT: PULSED POWER SUPPPLY 2000 A 300 VDC PLATE

QUESTA COPIA NON E' FIRMATA PERCHE' REGISTRATA E DISTRIBUITA TRAMITE SISTEMA AUTOMATICO DI GESTIONE DEL PATRIMONIO INFORMATIVO (PUO' ESSERE FIRMATA A RICHIESTA)
THIS COPY IS NOT SIGNED SINCE IT IS FILED AND DELIVERED BY MEANS OF THE AUTOMATIC KNOWLEDGE MANAGEMENT SYSTEM (IT CAN BE SIGNED ON REQUEST)
QUESTO DOCUMENTO E' PROPRIETA' RISERVATA DELLA OCEM ENERGY TECHNOLOGY IL SUO CONTENUTO NON PUO' ESSERE DIVULGATO NE' MODIFICATO SENZA IL CONSENSO SCRITTO DELLA OCEM ENERGY TECHNOLOGY
THIS DOCUMENT BELONGS TO OCEM ENERGY TECHNOLOGY ITS CONTENT CANNOT BE DIVULGED OR MODIFIED WITHOUT WRITTEN APPROVAL OF OCEM ENERGY TECHNOLOGY

DISEGNO N. DRAWING N.	078.5307.0	FORM. S.SIZE	A3
		FOGLIO SHEET	2 DI OF 25

Foglio	Titolo	Titolo 1
1	PULSED POWER SUPPPLY 2000 A 300 VDC	TITLE
2	PULSED POWER SUPPPLY 2000 A 300 VDC	PLATE
3	PULSED POWER SUPPPLY 2000 A 300 VDC	INDEX OF PAGES
4	PULSED POWER SUPPPLY 2000 A 300 VDC	LEGEND OF SYMBOLS
5	PULSED POWER SUPPPLY 2000 A 300 VDC	SPARE PAGE
6	PULSED POWER SUPPPLY 2000 A 300 VDC	POWER SUPPLY
7	PULSED POWER SUPPPLY 2000 A 300 VDC	POWER MODULE
8	PULSED POWER SUPPPLY 2000 A 300 VDC	POWER MODULE
9	PULSED POWER SUPPPLY 2000 A 300 VDC	SAFETY
10	PULSED POWER SUPPPLY 2000 A 300 VDC	POWER MODULE PS
11	PULSED POWER SUPPPLY 2000 A 300 VDC	POWER MODULE PS
12	PULSED POWER SUPPPLY 2000 A 300 VDC	PANEL PC CONNECTION
13	PULSED POWER SUPPPLY 2000 A 300 VDC	NI LAYOUT
14	PULSED POWER SUPPPLY 2000 A 300 VDC	NI CONNECTION
15	PULSED POWER SUPPPLY 2000 A 300 VDC	NI CONNECTION
16	PULSED POWER SUPPPLY 2000 A 300 VDC	DCVT CONNECTION
17	PULSED POWER SUPPPLY 2000 A 300 VDC	F255 BOARD CONNECTION
18	PULSED POWER SUPPPLY 2000 A 300 VDC	F031 BOARD CONNECTION
19	PULSED POWER SUPPPLY 2000 A 300 VDC	AUX BOARD CONNECTION
20	PULSED POWER SUPPPLY 2000 A 300 VDC	AUX BOARD CONNECTION
21	PULSED POWER SUPPPLY 2000 A 300 VDC	F239 BOARD CONNECTION
22	PULSED POWER SUPPPLY 2000 A 300 VDC	TERMINAL BOARDS
23	PULSED POWER SUPPPLY 2000 A 300 VDC	TERMINAL BOARDS
24	PULSED POWER SUPPPLY 2000 A 300 VDC	EXTERNAL LAYOUT
25	PULSED POWER SUPPPLY 2000 A 300 VDC	INTERNAL LAYOUT

				DATA DATE	04/07/2017
006	AS BUILT UPDATED	11/01/18	CC	DISEGN. DESIGNED	C.CASSANI
005	AS BUILT	21/12/17	CC	CONTROL. CHECKED	S.TENCONI
REV.	MODIFIC.	DATA DATE	FIRMA SIGNATURE	APPROV. APPROVED	G.TADDIA

CLIENTE CUSTOMER: ENEA PROTO-SPHERA

OCEM®

UNI EN ISO 9001 Cert. 9115 OCEM

QUESTA COPIA NON E' FIRMATA PERCHE' REGISTRATA E DISTRIBUITA TRAMITE SISTEMA AUTOMATICO DI GESTIONE DEL PATRIMONIO INFORMATIVO (PUO' ESSERE FIRMATA A RICHIESTA)
THIS COPY IS NOT SIGNED SINCE IT IS FILED AND DELIVERED BY MEANS OF THE AUTOMATIC KNOWLEDGE MANAGEMENT SYSTEM (IT CAN BE SIGNED ON REQUEST)
QUESTO DOCUMENTO E' PROPRIETA' RISERVATA DELLA OCEM ENERGY TECHNOLOGY IL SUO CONTENUTO NON PUO' ESSERE DIVULGATO NE' MODIFICATO SENZA IL CONSENSO SCRITTO DELLA OCEM ENERGY TECHNOLOGY
THIS DOCUMENT BELONGS TO OCEM ENERGY TECHNOLOGY ITS CONTENT CANNOT BE DIVULGED OR MODIFIED WITHOUT WRITTEN APPROVAL OF OCEM ENERGY TECHNOLOGY

OGGETTO SUBJECT: PULSED POWER SUPPPLY 2000 A 300 VDC
INDEX OF PAGES

DISEGNO N. DRAWING N.: 078.5307.0

FORM. S.SIZE: A3

FOGLIO SHEET: 3 DI OF 25

SYMBOLS LEGEND

Symbol	DESCRIPTION
	Terminal part or terminal (030202)
	Emergency push-button - Turn to release
	Lamp, signal lamp
	Control coil of auxiliary relays
	Contactors operating device
	Automatic opening power switch func. for. diff. magnetothrm. cur
	Automatic opening power switch func. for magnetotherm. currents
	Power switch
	Contactor (main make contact of a contactor)
	Contactor (main make contact of a contactor)
	Temperature sensitive switch, break contact
	Temperature sensitive switch, make contact
	Two circuits limit switch
	Break contact
	Make contact
	Power supply
	Induction motor, single phase, squirrel-cage
	Inductance
	Capacitor
	Resistance
	Pulg and socket
	Terminal part or terminal (030202v4)

				DATA DATE	04/07/2017
006	AS BUILT UPDATED	11/01/18	CC	DISEGN. DESIGNED	C.CASSANI
005	AS BUILT	21/12/17	CC	CONTROL. CHECKED	S.TENCONI
REV.	MODIFIC.	DATA DATE	FIRMA SIGNATURE	APPROV. APPROVED	G.TADDIA

CLIENTE CUSTOMER: ENEA PROTO-SPHERA

OCEM®

UNI EN ISO 9001 Cert. 9115 OCEM

QUESTA COPIA NON E' FIRMATA PERCHE' REGISTRATA E DISTRIBUITA TRAMITE SISTEMA AUTOMATICO DI GESTIONE DEL PATRIMONIO INFORMATIVO (PUO' ESSERE FIRMATA A RICHIESTA)
THIS COPY IS NOT SIGNED SINCE IT IS FILED AND DELIVERED BY MEANS OF THE AUTOMATIC KNOWLEDGE MANAGEMENT SYSTEM (IT CAN BE SIGNED ON REQUEST)
QUESTO DOCUMENTO E' PROPRIETA' RISERVATA DELLA OCEM ENERGY TECHNOLOGY IL SUO CONTENUTO NON PUO' ESSERE DIVULGATO NE' MODIFICATO SENZA IL CONSENSO SCRITTO DELLA OCEM ENERGY TECHNOLOGY
THIS DOCUMENT BELONGS TO OCEM ENERGY TECHNOLOGY ITS CONTENT CANNOT BE DIVULGED OR MODIFIED WITHOUT WRITTEN APPROVAL OF OCEM ENERGY TECHNOLOGY

OGGETTO SUBJECT: PULSED POWER SUPPPLY 2000 A 300 VDC
LEGEND OF SYMBOLS

DISEGNO N. DRAWING N.: 078.5307.0

FORM. S.SIZE: A3

FOGLIO SHEET: 4 DI OF 25

PAGE LEFT INTENTIONALLY BLANK

				DATA DATE	04/07/2017
006	AS BUILT UPDATED	11/01/18	CC	DISEGN. DESIGNED	C.CASSANI
005	AS BUILT	21/12/17	CC	CONTROL. CHECKED	S.TENCONI
REV.	MODIFIC.	DATA DATE	FIRMA SIGNATURE	APPROV. APPROVED	G.TADDIA

CLIENTE CUSTOMER
ENEA PROTO-SPHERA

OCEM®

UNI EN ISO 9001
Cert. 9115 OCEM

QUESTA COPIA NON E' FIRMATA PERCHE' REGISTRATA E DISTRIBUITA TRAMITE SISTEMA AUTOMATICO DI GESTIONE DEL PATRIMONIO INFORMATIVO (PUO' ESSERE FIRMATA A RICHIESTA)
THIS COPY IS NOT SIGNED SINCE IT IS FILED AND DELIVERED BY MEANS OF THE AUTOMATIC KNOWLEDGE MANAGEMENT SYSTEM (IT CAN BE SIGNED ON REQUEST)
QUESTO DOCUMENTO E' PROPRIETA' RISERVATA DELLA OCEM ENERGY TECHNOLOGY IL SUO CONTENUTO NON PUO' ESSERE DIVULGATO NE' MODIFICATO SENZA IL CONSENSO SCRITTO DELLA OCEM ENERGY TECHNOLOGY
THIS DOCUMENT BELONGS TO OCEM ENERGY TECHNOLOGY ITS CONTENT CANNOT BE DIVULGED OR MODIFIED WITHOUT WRITTEN APPROVAL OF OCEM ENERGY TECHNOLOGY

OGGETTO SUBJECT
PULSED POWER SUPPPLY 2000 A 300 VDC
SPARE PAGE

DISEGNO N. DRAWING N.
078.5307.0

FORM. S.SIZE A3
FOGLIO SHEET 5 DI OF 25

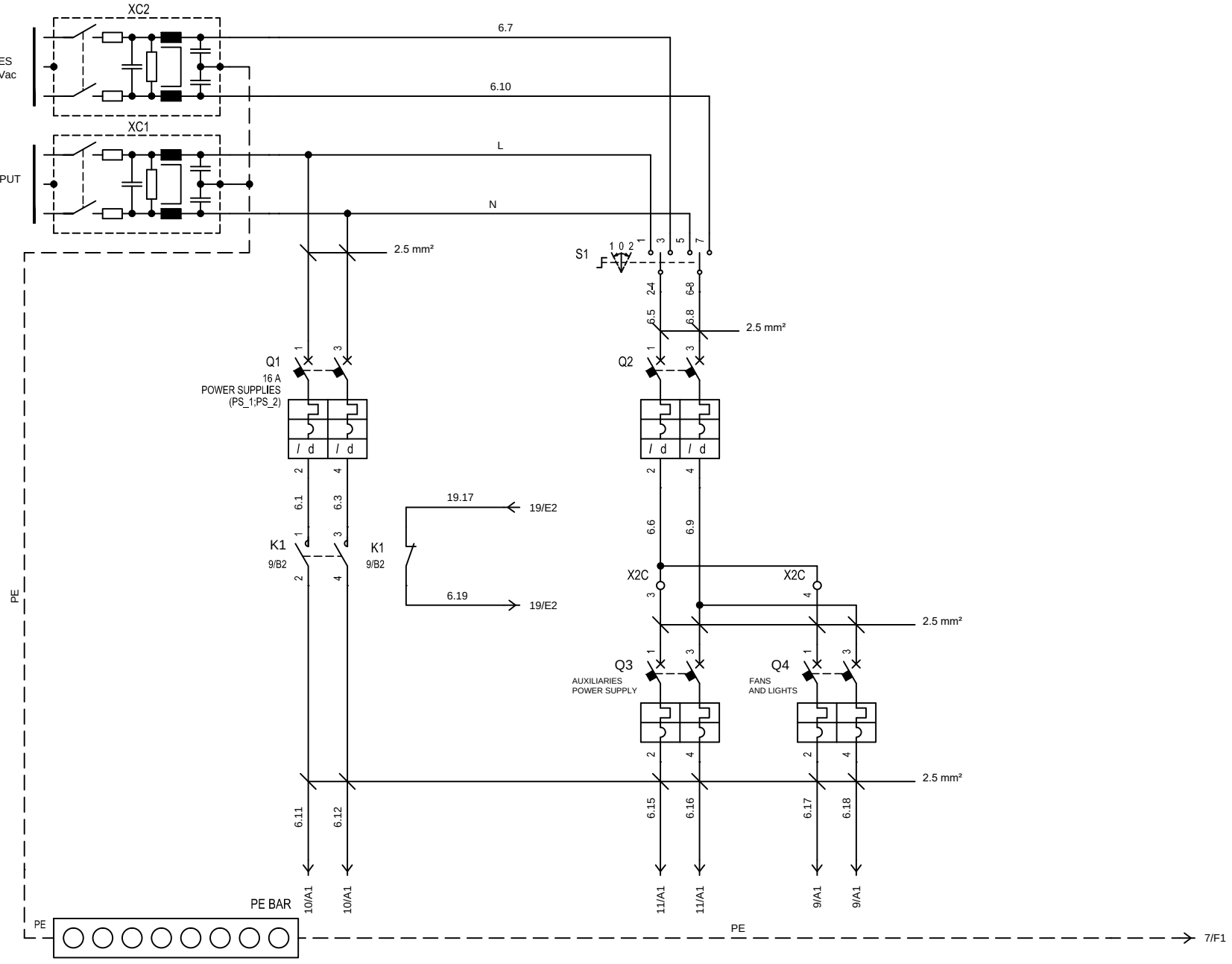

Fili disponibili dal: 6.2

				DATA DATE	04/07/2017
006	AS BUILT UPDATED	11/01/18	CC	DISEGN. DESIGNED	C.CASSANI
005	AS BUILT	21/12/17	CC	CONTROL. CHECKED	S.TENCONI
REV.	MODIFIC.	DATA DATE	FIRMA SIGNATURE	APPROV. APPROVED	G.TADDIA

CLIENTE CUSTOMER: ENEA PROTO-SPHERA

OCEM

UNI EN ISO 9001 Cert. 9115 OCEM

QUESTA COPIA NON E' FIRMATA PERCHE' REGISTRATA E DISTRIBUITA TRAMITE SISTEMA AUTOMATICO DI GESTIONE DEL PATRIMONIO INFORMATIVO (PUO' ESSERE FIRMATA A RICHIESTA)
THIS COPY IS NOT SIGNED SINCE IT IS FILED AND DELIVERED BY MEANS OF THE AUTOMATIC KNOWLEDGE MANAGEMENT SYSTEM (IT CAN BE SIGNED ON REQUEST)
QUESTO DOCUMENTO E' PROPRIETA' RISERVATA DELLA OCEM ENERGY TECHNOLOGY IL SUO CONTENUTO NON PUO' ESSERE DIVULGATO NE' MODIFICATO SENZA IL CONSENSO SCRITTO DELLA OCEM ENERGY TECHNOLOGY
THIS DOCUMENT BELONGS TO OCEM ENERGY TECHNOLOGY ITS CONTENT CANNOT BE DIVULGED OR MODIFIED WITHOUT WRITTEN APPROVAL OF OCEM ENERGY TECHNOLOGY

OGGETTO SUBJECT: PULSED POWER SUPPPLY 2000 A 300 VDC
POWER SUPPLY

DISEGNO N. DRAWING N.	FORM. S.SIZE	A3
078.5307.0	FOGLIO SHEET	6 DI OF 25

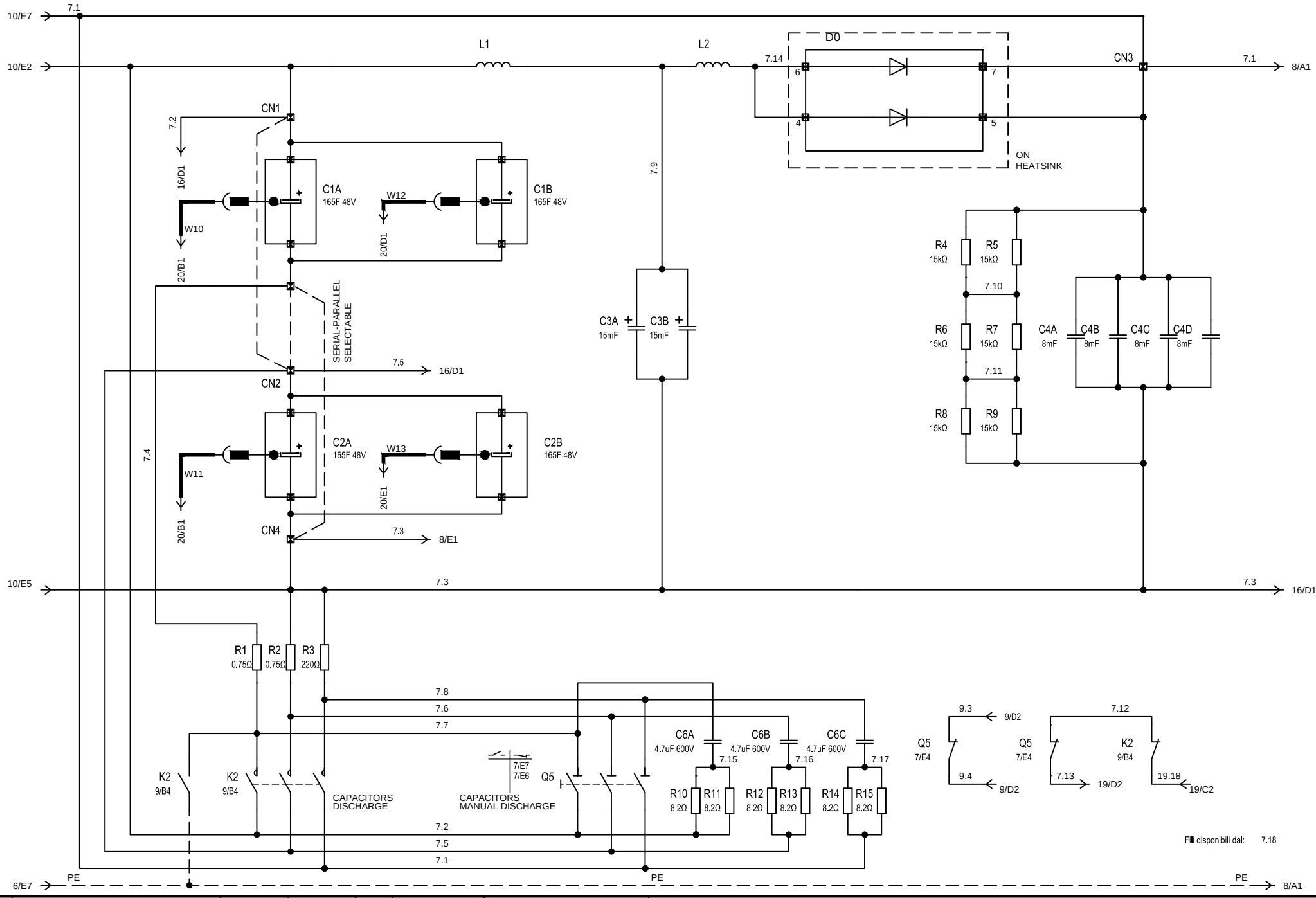

				DATA DATE	04/07/2017
006	AS BUILT UPDATED	11/01/18	CC	DISEGN. DESIGNED	C.CASSANI
005	AS BUILT	21/12/17	CC	CONTROL. CHECKED	S.TENCONI
REV.	MODIFIC.	DATA DATE	FIRMA SIGNATURE	APPROV. APPROVED	G.TADDIA

CLIENTE CUSTOMER: ENEA PROTO-SPHERA

QUESTA COPIA NON E' FIRMATA PERCHE' REGISTRATA E DISTRIBUITA TRAMITE SISTEMA AUTOMATICO DI GESTIONE DEL PATRIMONIO INFORMATIVO (PUO' ESSERE FIRMATA A RICHIESTA)
THIS COPY IS NOT SIGNED SINCE IT IS FILED AND DELIVERED BY MEANS OF THE AUTOMATIC KNOWLEDGE MANAGEMENT SYSTEM (IT CAN BE SIGNED ON REQUEST)
QUESTO DOCUMENTO E' PROPRIETA' RISERVATA DELLA OCEM ENERGY TECHNOLOGY IL SUO CONTENUTO NON PUO' ESSERE DIVULGATO NE' MODIFICATO SENZA IL CONSENSO SCRITTO DELLA OCEM ENERGY TECHNOLOGY
THIS DOCUMENT BELONGS TO OCEM ENERGY TECHNOLOGY ITS CONTENT CANNOT BE DIVULGED OR MODIFIED WITHOUT WRITTEN APPROVAL OF OCEM ENERGY TECHNOLOGY

OCEM® CSQ UNI EN ISO 9001 Cert. 9115 OCEM

OGGETTO SUBJECT: PULSED POWER SUPPPLY 2000 A 300 VDC
POWER MODULE

DISEGNO N. DRAWING N.	FORM. S.SIZE	FOGLIO SHEET	DI OF
078.5307.0	A3	7	25

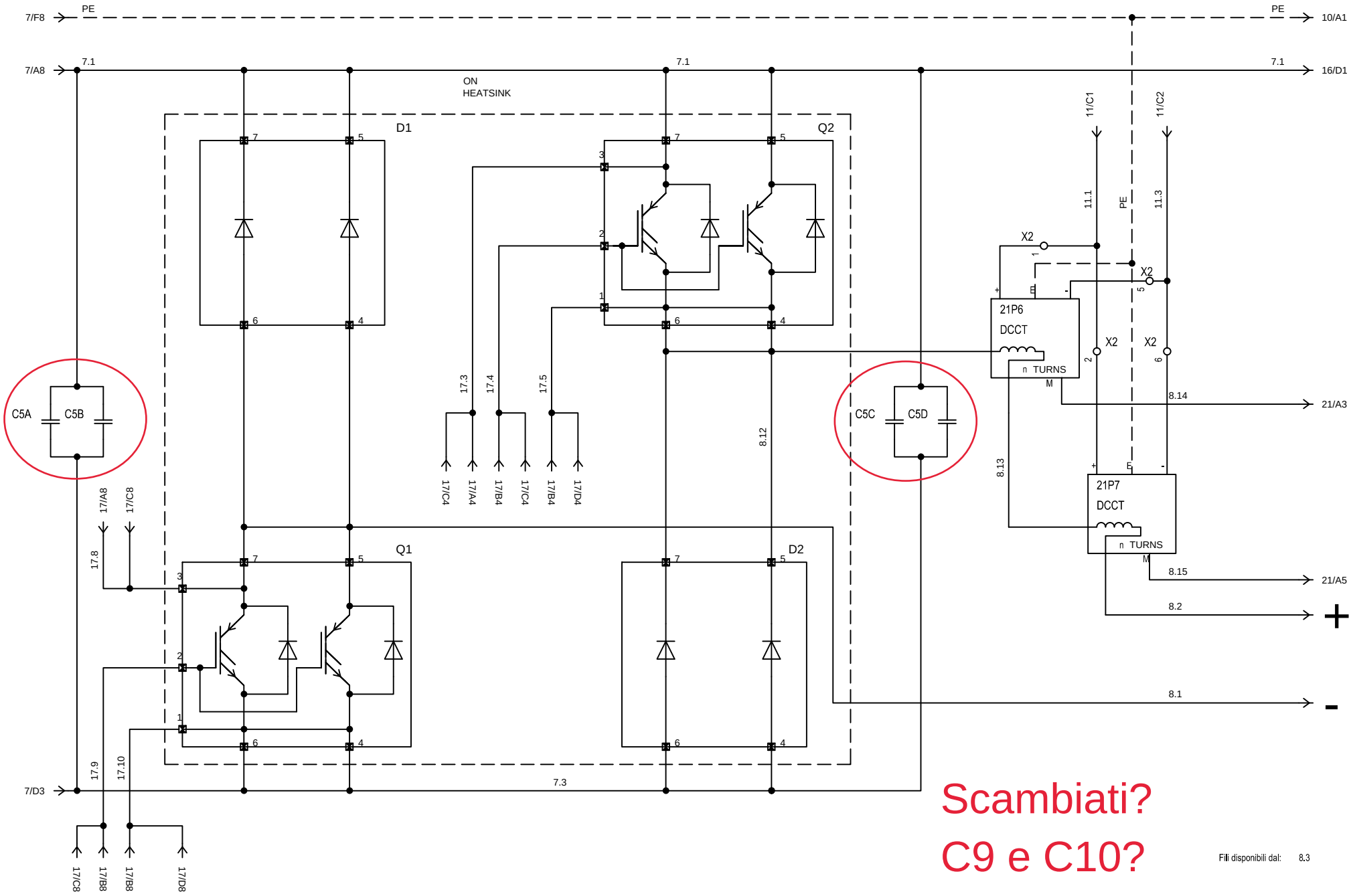

				DATA DATE	04/07/2017
006	AS BUILT UPDATED	11/01/18	CC	DISEGN. DESIGNED	C.CASSANI
005	AS BUILT	21/12/17	CC	CONTROL. CHECKED	S.TENCONI
REV.	MODIFIC.	DATA DATE	FIRMA SIGNATURE	APPROV. APPROVED	G.TADDIA

CLIENTE CUSTOMER: ENEA PROTO-SPHERA

OCEM® UNI EN ISO 9001 Cert. 9115 OCEM

QUESTA COPIA NON E' FIRMATA PERCHE' REGISTRATA E DISTRIBUITA TRAMITE SISTEMA AUTOMATICO DI GESTIONE DEL PATRIMONIO INFORMATIVO (PUO' ESSERE FIRMATA A RICHIESTA)
THIS COPY IS NOT SIGNED SINCE IT IS FILED AND DELIVERED BY MEANS OF THE AUTOMATIC KNOWLEDGE MANAGEMENT SYSTEM (IT CAN BE SIGNED ON REQUEST)
QUESTO DOCUMENTO E' PROPRIETA' RISERVATA DELLA OCEM ENERGY TECHNOLOGY IL SUO CONTENUTO NON PUO' ESSERE DIVULGATO NE' MODIFICATO SENZA IL CONSENSO SCRITTO DELLA OCEM ENERGY TECHNOLOGY
THIS DOCUMENT BELONGS TO OCEM ENERGY TECHNOLOGY ITS CONTENT CANNOT BE DIVULGED OR MODIFIED WITHOUT WRITTEN APPROVAL OF OCEM ENERGY TECHNOLOGY

OGGETTO SUBJECT: PULSED POWER SUPPPLY 2000 A 300 VDC
POWER MODULE

DISEGNO N. DRAWING N.	FORM. S.SIZE	
078.5307.0	FOGLIO SHEET	8 DI OF 25

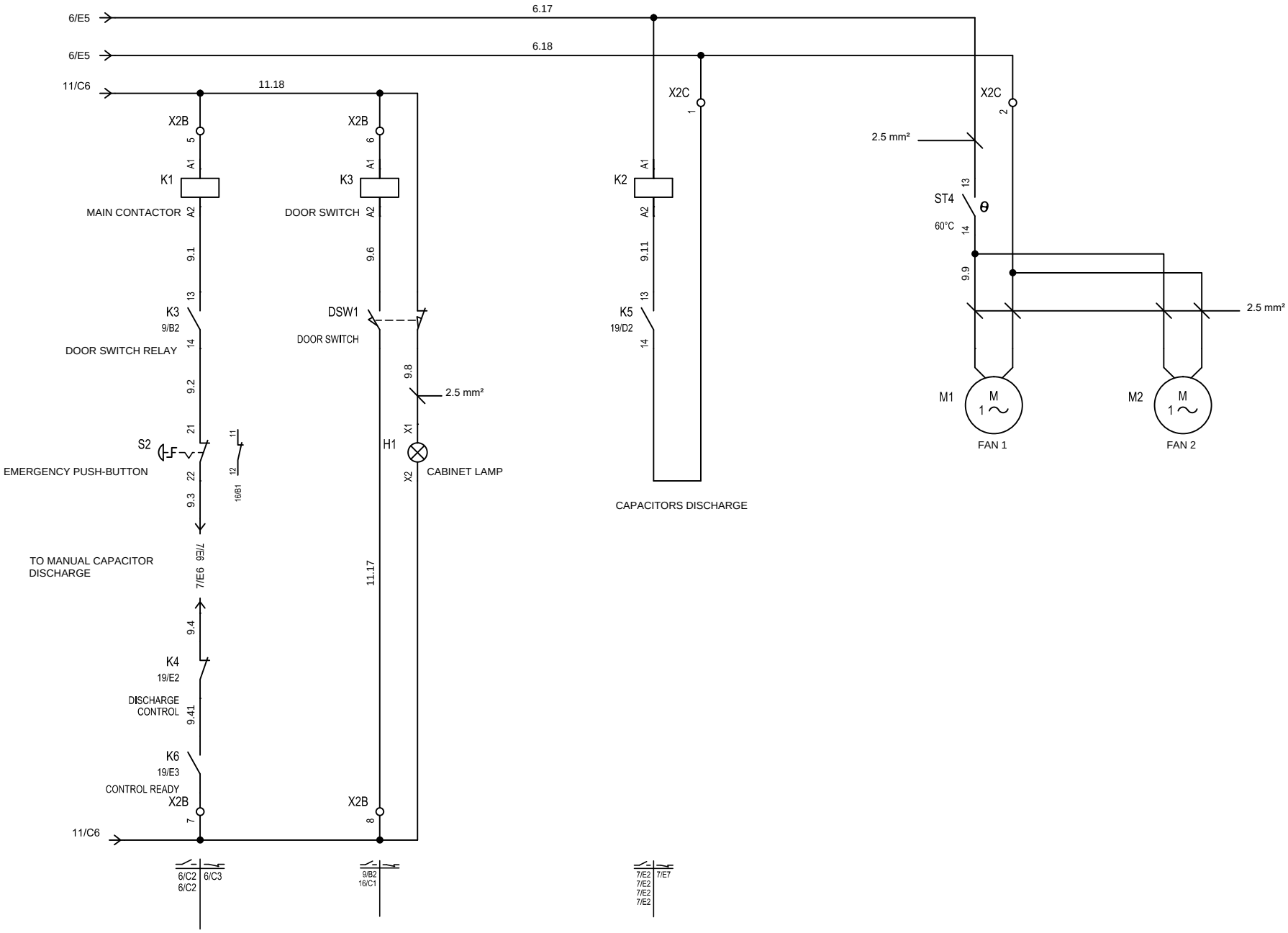

Fili disponibili dal: 9.5

				DATA DATE	04/07/2017
006	AS BUILT UPDATED	11/01/18	CC	DISEGN. DESIGNED	C.CASSANI
005	AS BUILT	21/12/17	CC	CONTROL. CHECKED	S.TENCONI
REV.	MODIFIC.	DATA DATE	FIRMA SIGNATURE	APPROV. APPROVED	G.TADDIA

CLIENTE CUSTOMER: ENEA PROTO-SPHERA

QUESTA COPIA NON E' FIRMATA PERCHE' REGISTRATA E DISTRIBUITA TRAMITE SISTEMA AUTOMATICO DI GESTIONE DEL PATRIMONIO INFORMATIVO (PUO' ESSERE FIRMATA A RICHIESTA)
THIS COPY IS NOT SIGNED SINCE IT IS FILED AND DELIVERED BY MEANS OF THE AUTOMATIC KNOWLEDGE MANAGEMENT SYSTEM (IT CAN BE SIGNED ON REQUEST)
QUESTO DOCUMENTO E' PROPRIETA' RISERVATA DELLA OCEM ENERGY TECHNOLOGY IL SUO CONTENUTO NON PUO' ESSERE DIVULGATO NE' MODIFICATO SENZA IL CONSENSO SCRITTO DELLA OCEM ENERGY TECHNOLOGY
THIS DOCUMENT BELONGS TO OCEM ENERGY TECHNOLOGY ITS CONTENT CANNOT BE DIVULGED OR MODIFIED WITHOUT WRITTEN APPROVAL OF OCEM ENERGY TECHNOLOGY

OCEM® esq UNI EN ISO 9001 Cert. 9115 OCEM

OGGETTO SUBJECT: PULSED POWER SUPPPLY 2000 A 300 VDC SAFETY

DISEGNO N. DRAWING N.	FORM. S.SIZE	A3
078.5307.0	FOGLIO SHEET	9 DI OF 25

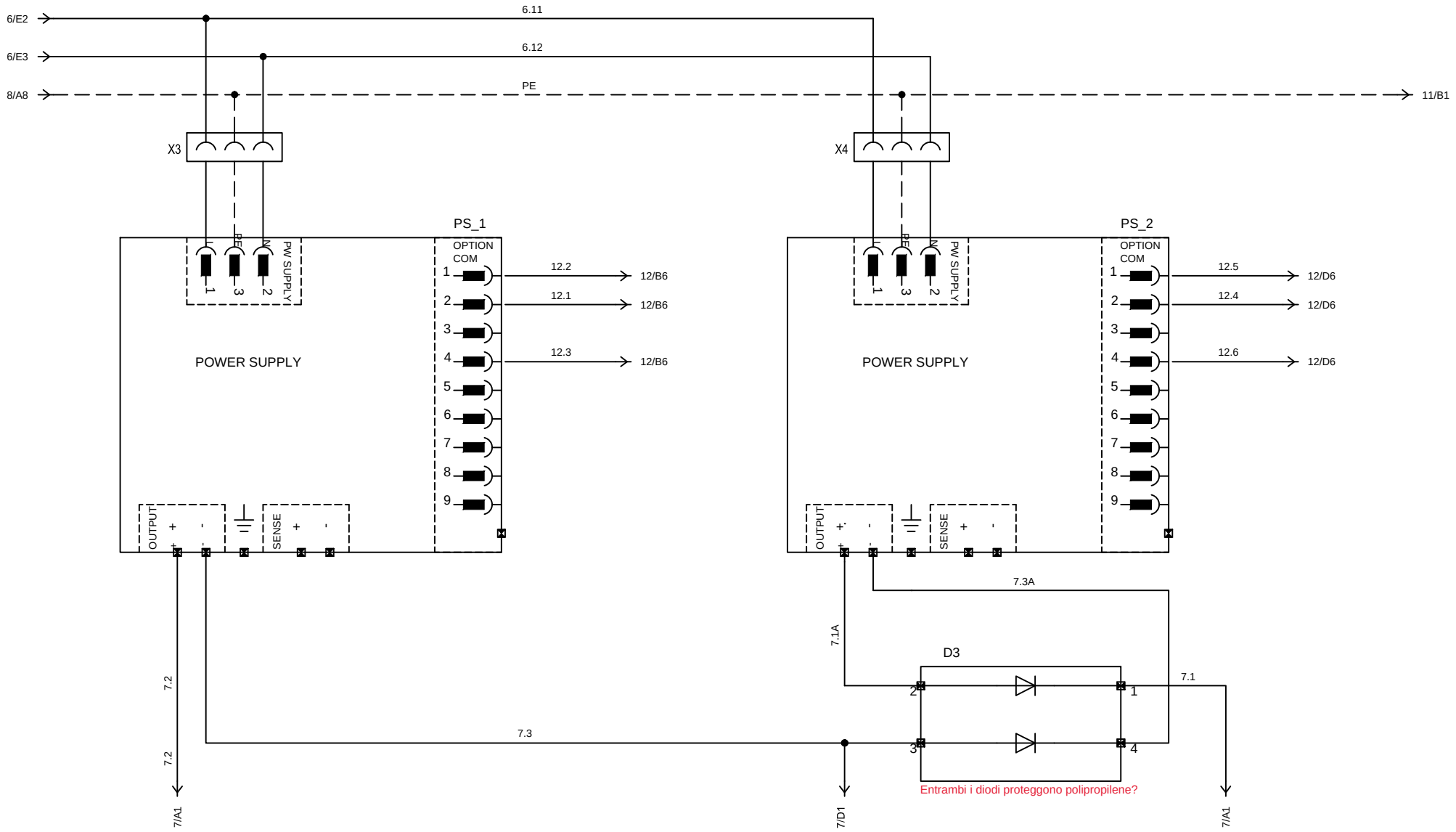

REV.	MODIFIC.	DATA DATE	FIRMA SIGNATURE	APPROV. APPROVED	
006	AS BUILT UPDATED	11/01/18	CC	DISEGN. DESIGNED	C.CASSANI
005	AS BUILT	21/12/17	CC	CONTROL. CHECKED	S.TENCONI
				DATA DATE	04/07/2017

CLIENTE CUSTOMER: ENEA PROTO-SPHERA

OCEM® — UNI EN ISO 9001 Cert. 9115 OCEM

QUESTA COPIA NON E' FIRMATA PERCHE' REGISTRATA E DISTRIBUITA TRAMITE SISTEMA AUTOMATICO DI GESTIONE DEL PATRIMONIO INFORMATIVO (PUO' ESSERE FIRMATA A RICHIESTA)
THIS COPY IS NOT SIGNED SINCE IT IS FILED AND DELIVERED BY MEANS OF THE AUTOMATIC KNOWLEDGE MANAGEMENT SYSTEM (IT CAN BE SIGNED ON REQUEST)
QUESTO DOCUMENTO E' PROPRIETA' RISERVATA DELLA OCEM ENERGY TECHNOLOGY IL SUO CONTENUTO NON PUO' ESSERE DIVULGATO NE' MODIFICATO SENZA IL CONSENSO SCRITTO DELLA OCEM ENERGY TECHNOLOGY
THIS DOCUMENT BELONGS TO OCEM ENERGY TECHNOLOGY ITS CONTENT CANNOT BE DIVULGED OR MODIFIED WITHOUT WRITTEN APPROVAL OF OCEM ENERGY TECHNOLOGY

OGGETTO SUBJECT: PULSED POWER SUPPPLY 2000 A 300 VDC
POWER MODULE PS

DISEGNO N. DRAWING N.: 078.5307.0

FORM. S.SIZE: A3

FOGLIO SHEET: 10 DI OF 25

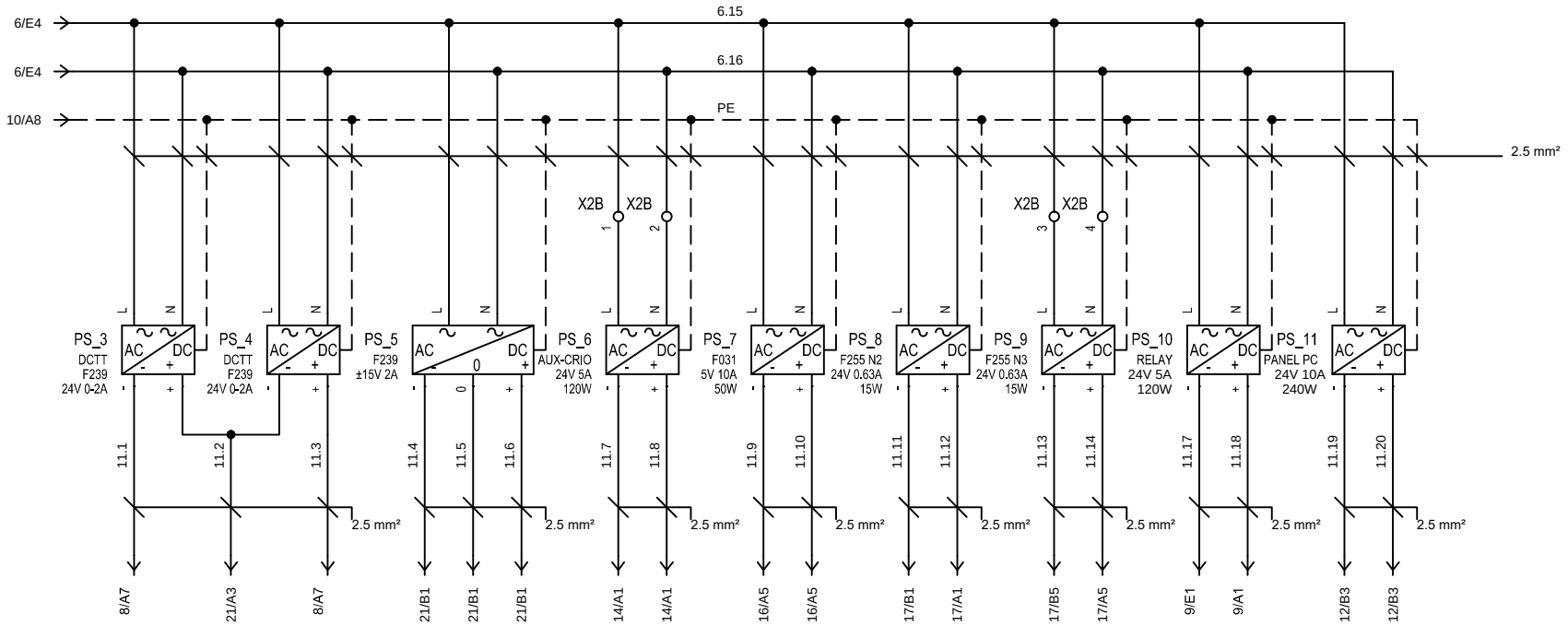

Fili disponibili dal: 11.15

				DATA DATE	04/07/2017
006	AS BUILT UPDATED	11/01/18	CC	DISEGN. DESIGNED	C.CASSANI
005	AS BUILT	21/12/17	CC	CONTROL. CHECKED	S.TENCONI
REV.	MODIFIC.	DATA DATE	FIRMA SIGNATURE	APPROV. APPROVED	G.TADDIA

CLIENTE CUSTOMER
ENEA PROTO-SPHERA

OCEM®

UNI EN ISO 9001
Cert. 9115 OCEM

QUESTA COPIA NON E' FIRMATA PERCHE' REGISTRATA E DISTRIBUITA TRAMITE SISTEMA AUTOMATICO DI GESTIONE DEL PATRIMONIO INFORMATIVO (PUO' ESSERE FIRMATA A RICHIESTA)
THIS COPY IS NOT SIGNED SINCE IT IS FILED AND DELIVERED BY MEANS OF THE AUTOMATIC KNOWLEDGE MANAGEMENT SYSTEM (IT CAN BE SIGNED ON REQUEST)
QUESTO DOCUMENTO E' PROPRIETA' RISERVATA DELLA OCEM ENERGY TECHNOLOGY IL SUO CONTENUTO NON PUO' ESSERE DIVULGATO NE' MODIFICATO SENZA IL CONSENSO SCRITTO DELLA OCEM ENERGY TECHNOLOGY
THIS DOCUMENT BELONGS TO OCEM ENERGY TECHNOLOGY ITS CONTENT CANNOT BE DIVULGED OR MODIFIED WITHOUT WRITTEN APPROVAL OF OCEM ENERGY TECHNOLOGY

OGGETTO SUBJECT
PULSED POWER SUPPPLY 2000 A 300 VDC
POWER MODULE PS

DISEGNO N. DRAWING N.	FORM. S.SIZE	
078.5307.0	A3	
	FOGLIO SHEET	11 DI OF 25

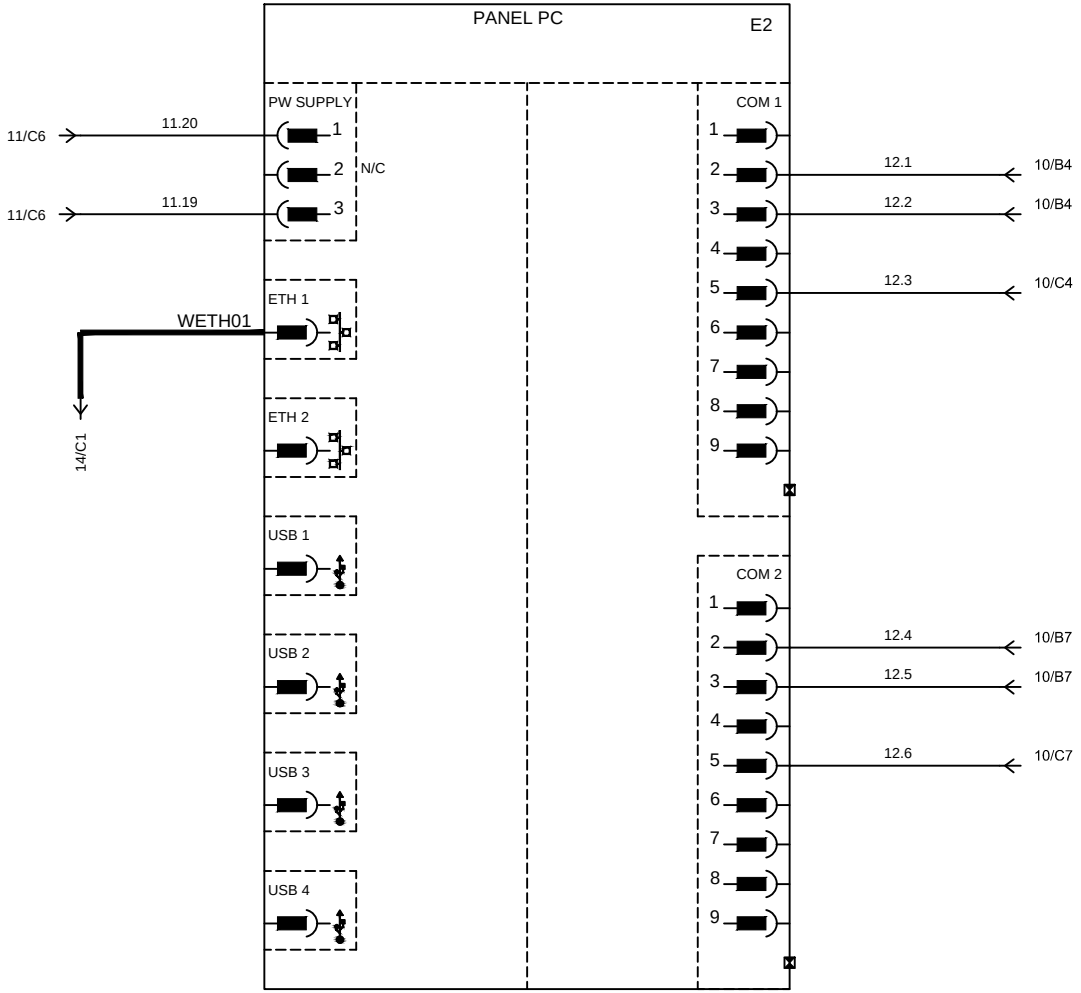

Fili disponibili dal: 12.7

				DATA DATE	04/07/2017
006	AS BUILT UPDATED	11/01/18	CC	DISEGN. DESIGNED	C.CASSANI
005	AS BUILT	21/12/17	CC	CONTROL. CHECKED	S.TENCONI
REV.	MODIFIC.	DATA DATE	FIRMA SIGNATURE	APPROV. APPROVED	G.TADDIA

CLIENTE CUSTOMER: ENEA PROTO-SPHERA

QUESTA COPIA NON E' FIRMATA PERCHE' REGISTRATA E DISTRIBUITA TRAMITE SISTEMA AUTOMATICO DI GESTIONE DEL PATRIMONIO INFORMATIVO (PUO' ESSERE FIRMATA A RICHIESTA)
THIS COPY IS NOT SIGNED SINCE IT IS FILED AND DELIVERED BY MEANS OF THE AUTOMATIC KNOWLEDGE MANAGEMENT SYSTEM (IT CAN BE SIGNED ON REQUEST)
QUESTO DOCUMENTO E' PROPRIETA' RISERVATA DELLA OCEM ENERGY TECHNOLOGY IL SUO CONTENUTO NON PUO' ESSERE DIVULGATO NE' MODIFICATO SENZA IL CONSENSO SCRITTO DELLA OCEM ENERGY TECHNOLOGY
THIS DOCUMENT BELONGS TO OCEM ENERGY TECHNOLOGY ITS CONTENT CANNOT BE DIVULGED OR MODIFIED WITHOUT WRITTEN APPROVAL OF OCEM ENERGY TECHNOLOGY

OCEM®

UNI EN ISO 9001 Cert. 9115 OCEM

OGGETTO SUBJECT: PULSED POWER SUPPPLY 2000 A 300 VDC
PANEL PC CONNECTION

DISEGNO N. DRAWING N.: 078.5307.0

FORM. S.SIZE: A3

FOGLIO SHEET: 12 DI OF 25

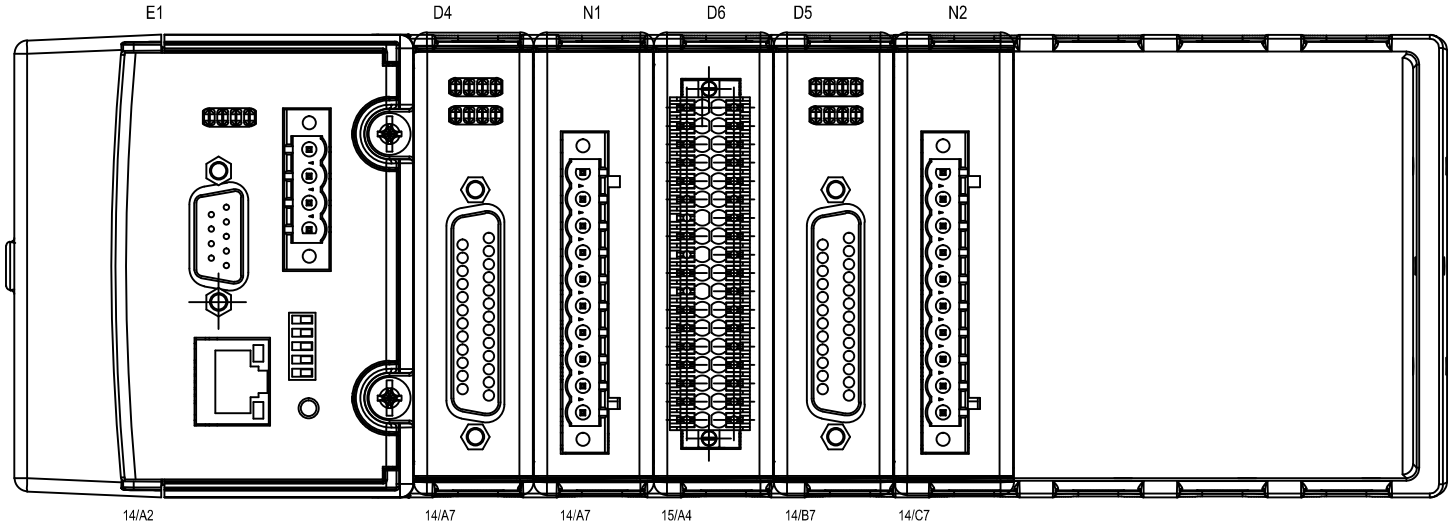

				DATA DATE	04/07/2017	CLIENTE CUSTOMER: ENEA PROTO-SPHERA	QUESTA COPIA NON E' FIRMATA PERCHE' REGISTRATA E DISTRIBUITA TRAMITE SISTEMA AUTOMATICO DI GESTIONE DEL PATRIMONIO INFORMATIVO (PUO' ESSERE FIRMATA A RICHIESTA) THIS COPY IS NOT SIGNED SINCE IT IS FILED AND DELIVERED BY MEANS OF THE AUTOMATIC KNOWLEDGE MANAGEMENT SYSTEM (IT CAN BE SIGNED ON REQUEST) QUESTO DOCUMENTO E' PROPRIETA' RISERVATA DELLA OCEM ENERGY TECHNOLOGY IL SUO CONTENUTO NON PUO' ESSERE DIVULGATO NE' MODIFICATO SENZA IL CONSENSO SCRITTO DELLA OCEM ENERGY TECHNOLOGY THIS DOCUMENT BELONGS TO OCEM ENERGY TECHNOLOGY ITS CONTENT CANNOT BE DIVULGED OR MODIFIED WITHOUT WRITTEN APPROVAL OF OCEM ENERGY TECHNOLOGY
006	AS BUILT UPDATED	11/01/18	CC	DISEGN. DESIGNED	C.CASSANI		
005	AS BUILT	21/12/17	CC	CONTROL. CHECKED	S.TENCONI		
REV.	MODIFIC.	DATA DATE	FIRMA SIGNATURE	APPROV. APPROVED	G.TADDIA	OCEM® UNI EN ISO 9001 Cert. 9115 OCEM	OGGETTO SUBJECT: PULSED POWER SUPPPLY 2000 A 300 VDC NI LAYOUT

DISEGNO N. DRAWING N.: 078.5307.0 | FORM. S.SIZE: A3 | FOGLIO SHEET: 13 DI OF 25

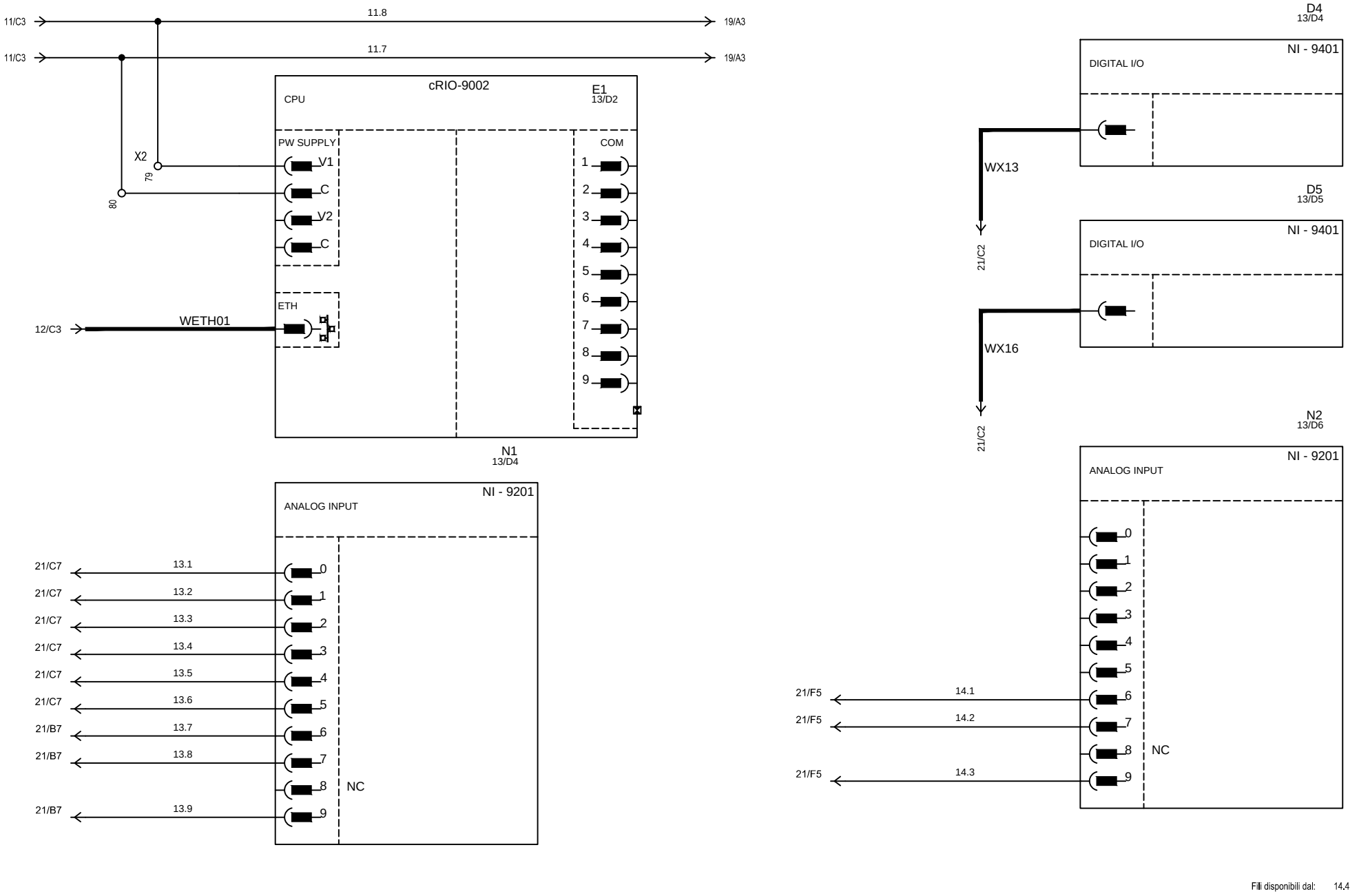

REV.		DATA DATE	FIRMA SIGNATURE	APPROV. APPROVED	
006	AS BUILT UPDATED	11/01/18	CC	DISEGN. DESIGNED	C.CASSANI
005	AS BUILT	21/12/17	CC	CONTROL. CHECKED	S.TENCONI
REV.	MODIFIC.	DATA DATE	FIRMA SIGNATURE	APPROV. APPROVED	G.TADDIA

DATA DATE: 04/07/2017

CLIENTE CUSTOMER: ENEA PROTO-SPHERA

QUESTA COPIA NON E' FIRMATA PERCHE' REGISTRATA E DISTRIBUITA TRAMITE SISTEMA AUTOMATICO DI GESTIONE DEL PATRIMONIO INFORMATIVO (PUO' ESSERE FIRMATA A RICHIESTA)
THIS COPY IS NOT SIGNED SINCE IT IS FILED AND DELIVERED BY MEANS OF THE AUTOMATIC KNOWLEDGE MANAGEMENT SYSTEM (IT CAN BE SIGNED ON REQUEST)
QUESTO DOCUMENTO E' PROPRIETA' RISERVATA DELLA OCEM ENERGY TECHNOLOGY IL SUO CONTENUTO NON PUO' ESSERE DIVULGATO NE' MODIFICATO SENZA IL CONSENSO SCRITTO DELLA OCEM ENERGY TECHNOLOGY
THIS DOCUMENT BELONGS TO OCEM ENERGY TECHNOLOGY ITS CONTENT CANNOT BE DIVULGED OR MODIFIED WITHOUT WRITTEN APPROVAL OF OCEM ENERGY TECHNOLOGY

OCEM®

UNI EN ISO 9001 Cert. 9115 OCEM

OGGETTO SUBJECT: PULSED POWER SUPPPLY 2000 A 300 VDC
NI CONNECTION

DISEGNO N. DRAWING N.: 078.5307.0

FORM. S.SIZE: A3

FOGLIO SHEET: 14 DI OF 25

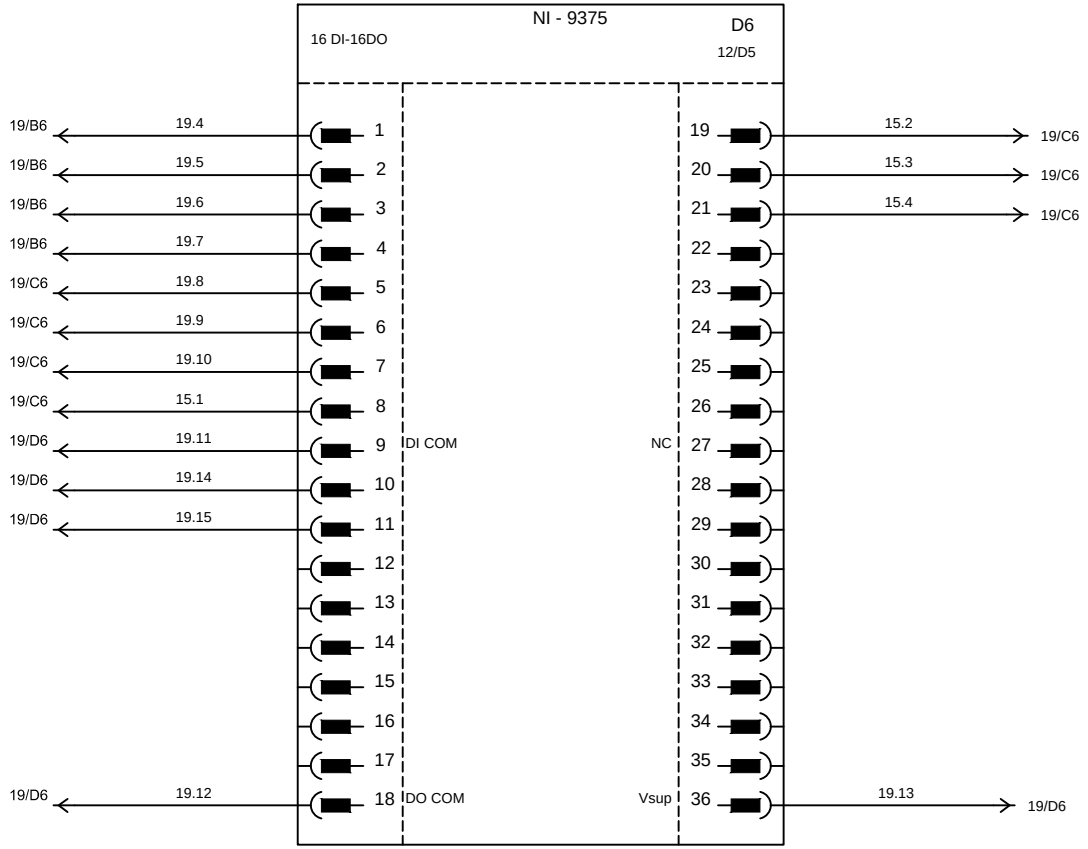

Fili disponibili dal: 15.5

				DATA DATE	04/07/2017	CLIENTE CUSTOMER: ENEA PROTO-SPHERA	QUESTA COPIA NON E' FIRMATA PERCHE' REGISTRATA E DISTRIBUITA TRAMITE SISTEMA AUTOMATICO DI GESTIONE DEL PATRIMONIO INFORMATIVO (PUO' ESSERE FIRMATA A RICHIESTA) THIS COPY IS NOT SIGNED SINCE IT IS FILED AND DELIVERED BY MEANS OF THE AUTOMATIC KNOWLEDGE MANAGEMENT SYSTEM (IT CAN BE SIGNED ON REQUEST) QUESTO DOCUMENTO E' PROPRIETA' RISERVATA DELLA OCEM ENERGY TECHNOLOGY IL SUO CONTENUTO NON PUO' ESSERE DIVULGATO NE' MODIFICATO SENZA IL CONSENSO SCRITTO DELLA OCEM ENERGY TECHNOLOGY THIS DOCUMENT BELONGS TO OCEM ENERGY TECHNOLOGY ITS CONTENT CANNOT BE DIVULGED OR MODIFIED WITHOUT WRITTEN APPROVAL OF OCEM ENERGY TECHNOLOGY		
006	AS BUILT UPDATED	11/01/18	CC	DISEGN. DESIGNED	C.CASSANI				
005	AS BUILT	21/12/17	CC	CONTROL. CHECKED	S.TENCONI	OCEM® CSQ UNI EN ISO 9001 Cert. 9115 OCEM	OGGETTO SUBJECT: PULSED POWER SUPPPLY 2000 A 300 VDC NI CONNECTION	DISEGNO N. DRAWING N.: 078.5307.0	FORM. S.SIZE: A3
REV.	MODIFIC.	DATA DATE	FIRMA SIGNATURE	APPROV. APPROVED	G.TADDIA				FOGLIO SHEET: 15 DI OF 25

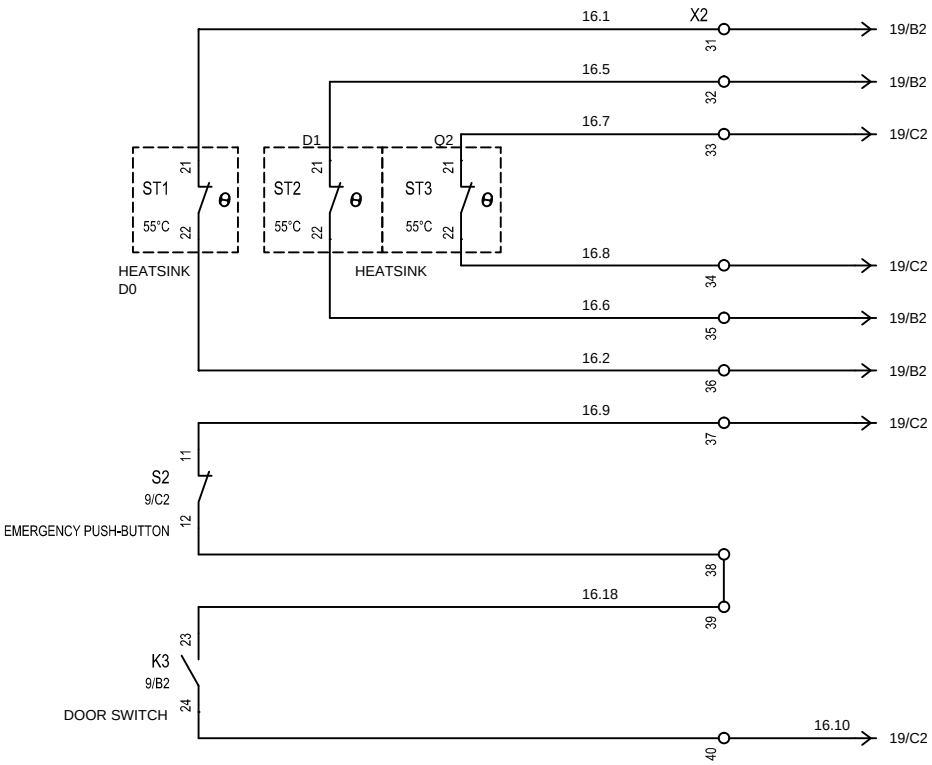

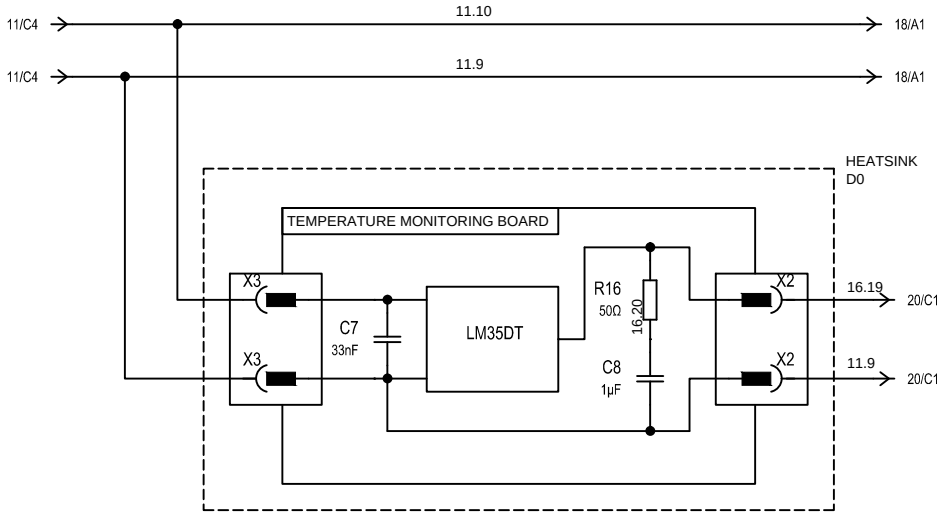

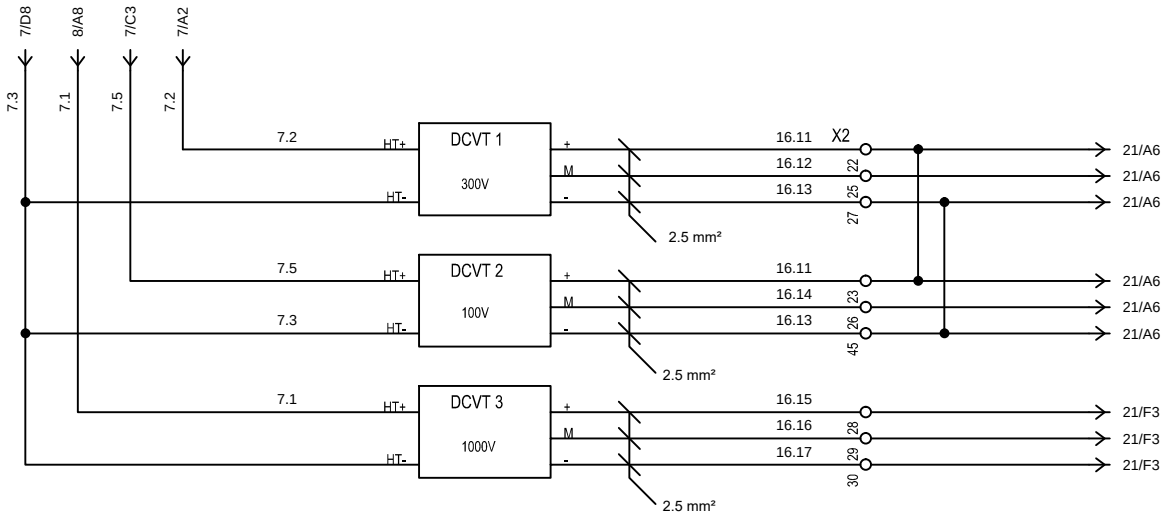

Filo iniziale: 16.18
Filo finale: 16.18
Fili disponibili dal: 16.21

				DATA DATE	04/07/2017
006	AS BUILT UPDATED	11/01/18	CC	DISEGN. DESIGNED	C.CASSANI
005	AS BUILT	21/12/17	CC	CONTROL. CHECKED	S.TENCONI
REV.	MODIFIC.	DATA DATE	FIRMA SIGNATURE	APPROV. APPROVED	G.TADDIA

CLIENTE CUSTOMER: ENEA PROTO-SPHERA

QUESTA COPIA NON E' FIRMATA PERCHE' REGISTRATA E DISTRIBUITA TRAMITE SISTEMA AUTOMATICO DI GESTIONE DEL PATRIMONIO INFORMATIVO (PUO' ESSERE FIRMATA A RICHIESTA)
THIS COPY IS NOT SIGNED SINCE IT IS FILED AND DELIVERED BY MEANS OF THE AUTOMATIC KNOWLEDGE MANAGEMENT SYSTEM (IT CAN BE SIGNED ON REQUEST)
QUESTO DOCUMENTO E' PROPRIETA' RISERVATA DELLA OCEM ENERGY TECHNOLOGY IL SUO CONTENUTO NON PUO' ESSERE DIVULGATO NE' MODIFICATO SENZA IL CONSENSO SCRITTO DELLA OCEM ENERGY TECHNOLOGY
THIS DOCUMENT BELONGS TO OCEM ENERGY TECHNOLOGY ITS CONTENT CANNOT BE DIVULGED OR MODIFIED WITHOUT WRITTEN APPROVAL OF OCEM ENERGY TECHNOLOGY

OCEM® esq UNI EN ISO 9001 Cert. 9115 OCEM

OGGETTO SUBJECT: PULSED POWER SUPPPLY 2000 A 300 VDC
DCVT CONNECTION

DISEGNO N. DRAWING N.: 078.5307.0

FORM. S.SIZE: A3

FOGLIO SHEET: 16 DI OF 25

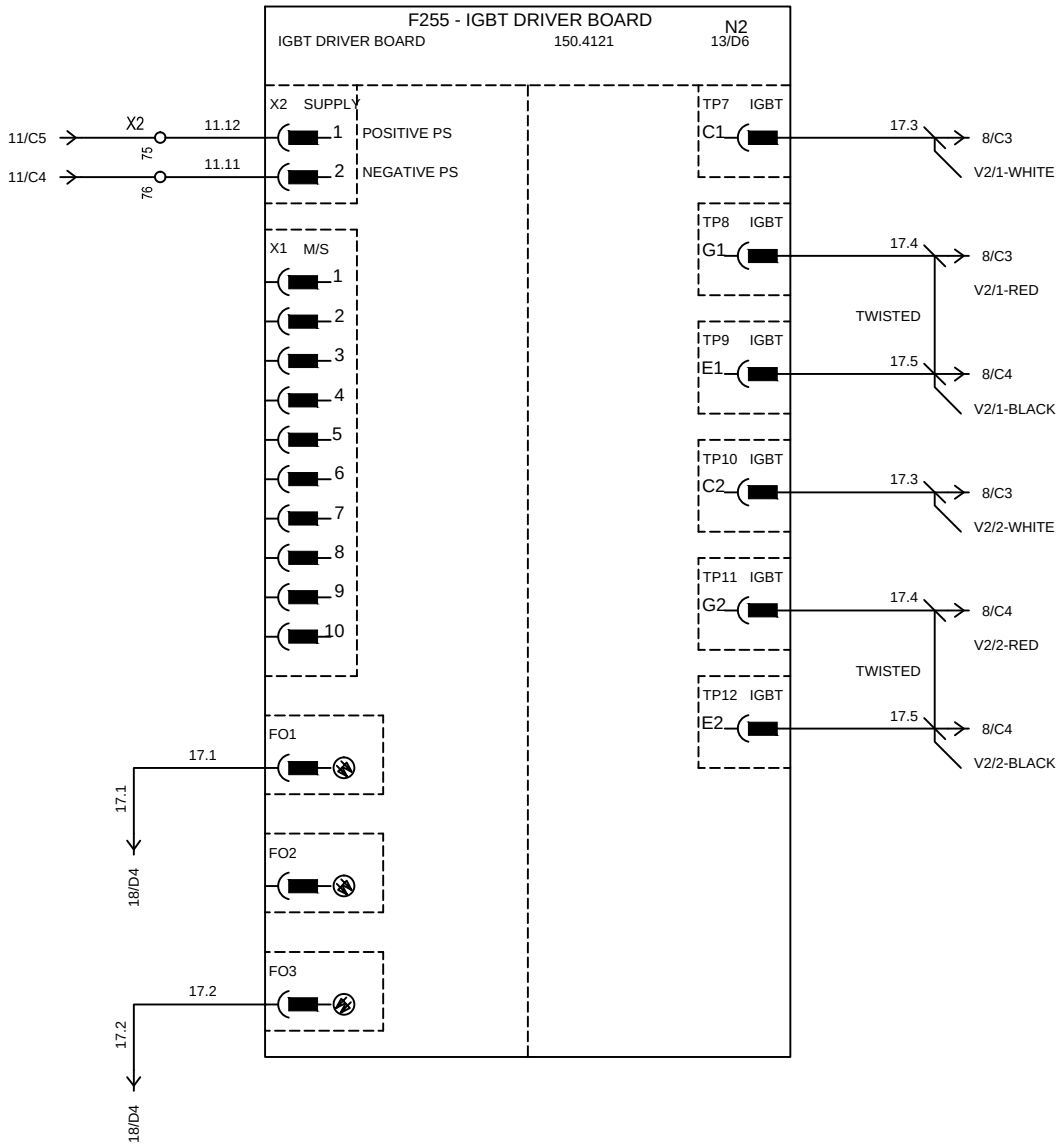

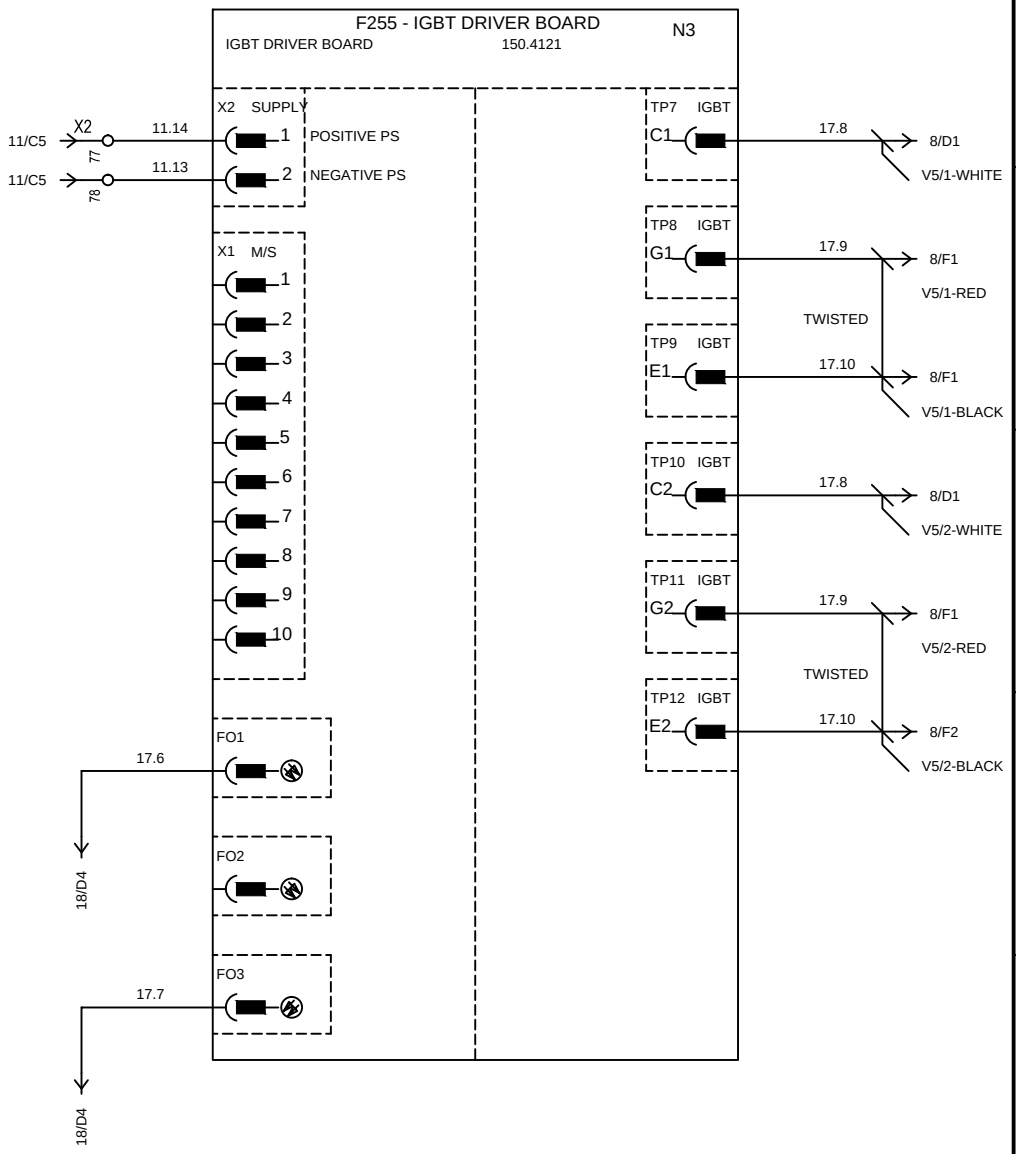

N2 e N3 sono invertite?

Fili disponibili dal: 17.11

				DATA DATE	04/07/2017
006	AS BUILT UPDATED	11/01/18	CC	DISEGN. DESIGNED	C.CASSANI
005	AS BUILT	21/12/17	CC	CONTROL. CHECKED	S.TENCONI
REV.	MODIFIC.	DATA DATE	FIRMA SIGNATURE	APPROV. APPROVED	G.TADDIA

CLIENTE CUSTOMER: ENEA PROTO-SPHERA

OCEM® UNI EN ISO 9001 Cert. 9115 OCEM

OGGETTO SUBJECT: PULSED POWER SUPPPLY 2000 A 300 VDC
F255 BOARD CONNECTION

DISEGNO N. DRAWING N.: 078.5307.0

FORM. S.SIZE: A3

FOGLIO SHEET: 17 DI OF 25

QUESTA COPIA NON E' FIRMATA PERCHE' REGISTRATA E DISTRIBUITA TRAMITE SISTEMA AUTOMATICO DI GESTIONE DEL PATRIMONIO INFORMATIVO (PUO' ESSERE FIRMATA A RICHIESTA)
THIS COPY IS NOT SIGNED SINCE IT IS FILED AND DELIVERED BY MEANS OF THE AUTOMATIC KNOWLEDGE MANAGEMENT SYSTEM (IT CAN BE SIGNED ON REQUEST)
QUESTO DOCUMENTO E' PROPRIETA' RISERVATA DELLA OCEM ENERGY TECHNOLOGY IL SUO CONTENUTO NON PUO' ESSERE DIVULGATO NE' MODIFICATO SENZA IL CONSENSO SCRITTO DELLA OCEM ENERGY TECHNOLOGY
THIS DOCUMENT BELONGS TO OCEM ENERGY TECHNOLOGY ITS CONTENT CANNOT BE DIVULGED OR MODIFIED WITHOUT WRITTEN APPROVAL OF OCEM ENERGY TECHNOLOGY

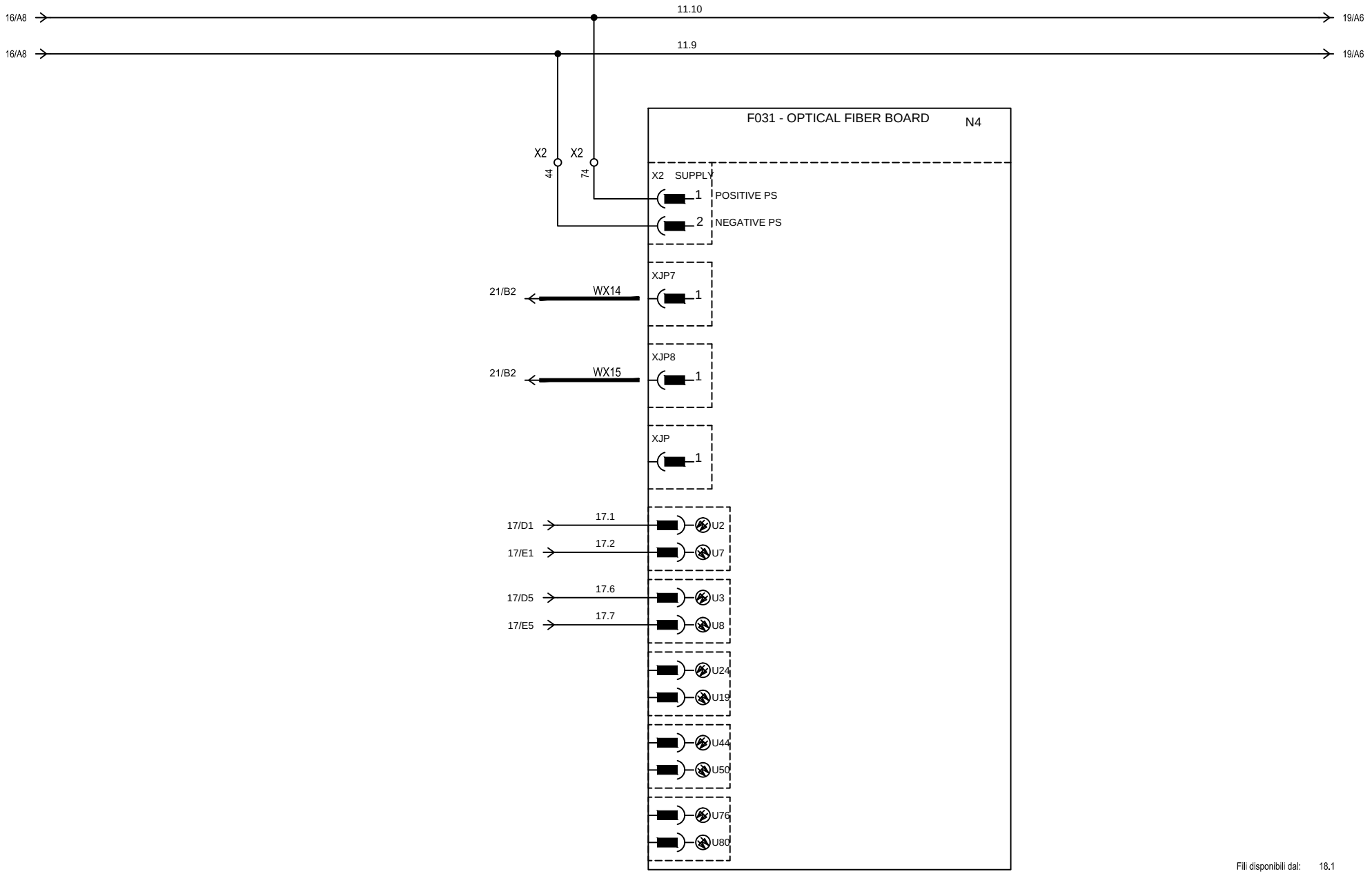

				DATA DATE	04/07/2017
006	AS BUILT UPDATED	11/01/18	CC	DISEGN. DESIGNED	C.CASSANI
005	AS BUILT	21/12/17	CC	CONTROL. CHECKED	S.TENCONI
REV.	MODIFIC.	DATA DATE	FIRMA SIGNATURE	APPROV. APPROVED	G.TADDIA

CLIENTE CUSTOMER: ENEA PROTO-SPHERA

QUESTA COPIA NON E' FIRMATA PERCHE' REGISTRATA E DISTRIBUITA TRAMITE SISTEMA AUTOMATICO DI GESTIONE DEL PATRIMONIO INFORMATIVO (PUO' ESSERE FIRMATA A RICHIESTA)
THIS COPY IS NOT SIGNED SINCE IT IS FILED AND DELIVERED BY MEANS OF THE AUTOMATIC KNOWLEDGE MANAGEMENT SYSTEM (IT CAN BE SIGNED ON REQUEST)
QUESTO DOCUMENTO E' PROPRIETA' RISERVATA DELLA OCEM ENERGY TECHNOLOGY IL SUO CONTENUTO NON PUO' ESSERE DIVULGATO NE' MODIFICATO SENZA IL CONSENSO SCRITTO DELLA OCEM ENERGY TECHNOLOGY
THIS DOCUMENT BELONGS TO OCEM ENERGY TECHNOLOGY ITS CONTENT CANNOT BE DIVULGED OR MODIFIED WITHOUT WRITTEN APPROVAL OF OCEM ENERGY TECHNOLOGY

OCEM®

UNI EN ISO 9001 Cert. 9115 OCEM

OGGETTO SUBJECT: PULSED POWER SUPPPLY 2000 A 300 VDC
F031 BOARD CONNECTION

DISEGNO N. DRAWING N.: 078.5307.0

FORM. S.SIZE: A3

FOGLIO SHEET: 18 DI OF 25

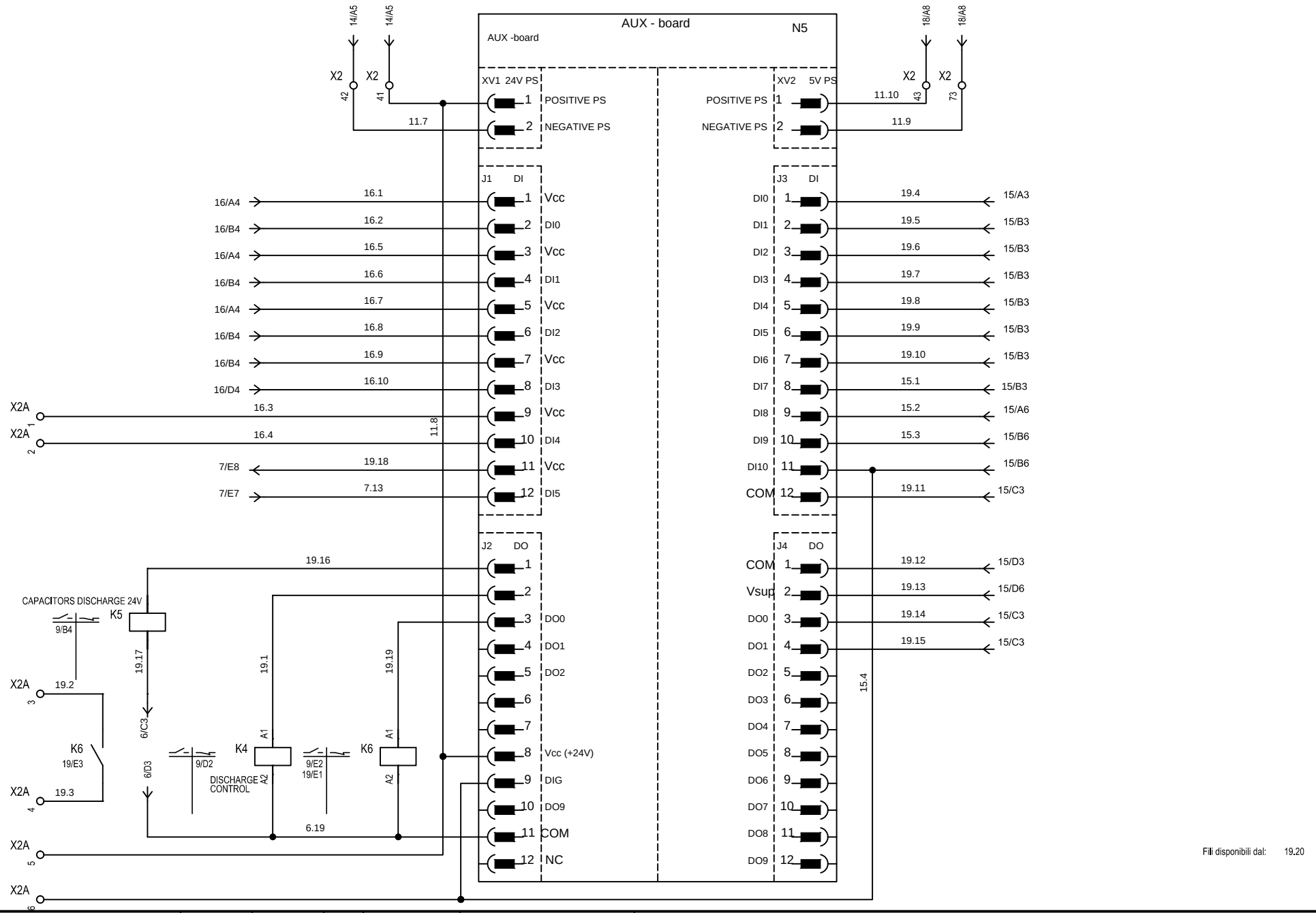

				DATA DATE	04/07/2017
006	AS BUILT UPDATED	11/01/18	CC	DISEGN. DESIGNED	C.CASSANI
005	AS BUILT	21/12/17	CC	CONTROL. CHECKED	S.TENCONI
REV.	MODIFIC.	DATA DATE	FIRMA SIGNATURE	APPROV. APPROVED	G.TADDIA

CLIENTE CUSTOMER: ENEA PROTO-SPHERA

OCEM® UNI EN ISO 9001 Cert. 9115 OCEM

OGGETTO SUBJECT: PULSED POWER SUPPPLY 2000 A 300 VDC
AUX BOARD CONNECTION

DISEGNO N. DRAWING N.: 078.5307.0

FORM. S.SIZE: A3

FOGLIO SHEET: 19 DI OF 25

QUESTA COPIA NON E' FIRMATA PERCHE' REGISTRATA E DISTRIBUITA TRAMITE SISTEMA AUTOMATICO DI GESTIONE DEL PATRIMONIO INFORMATIVO (PUO' ESSERE FIRMATA A RICHIESTA)
THIS COPY IS NOT SIGNED SINCE IT IS FILED AND DELIVERED BY MEANS OF THE AUTOMATIC KNOWLEDGE MANAGEMENT SYSTEM (IT CAN BE SIGNED ON REQUEST)
QUESTO DOCUMENTO E' PROPRIETA' RISERVATA DELLA OCEM ENERGY TECHNOLOGY IL SUO CONTENUTO NON PUO' ESSERE DIVULGATO NE' MODIFICATO SENZA IL CONSENSO SCRITTO DELLA OCEM ENERGY TECHNOLOGY
THIS DOCUMENT BELONGS TO OCEM ENERGY TECHNOLOGY ITS CONTENT CANNOT BE DIVULGED OR MODIFIED WITHOUT WRITTEN APPROVAL OF OCEM ENERGY TECHNOLOGY

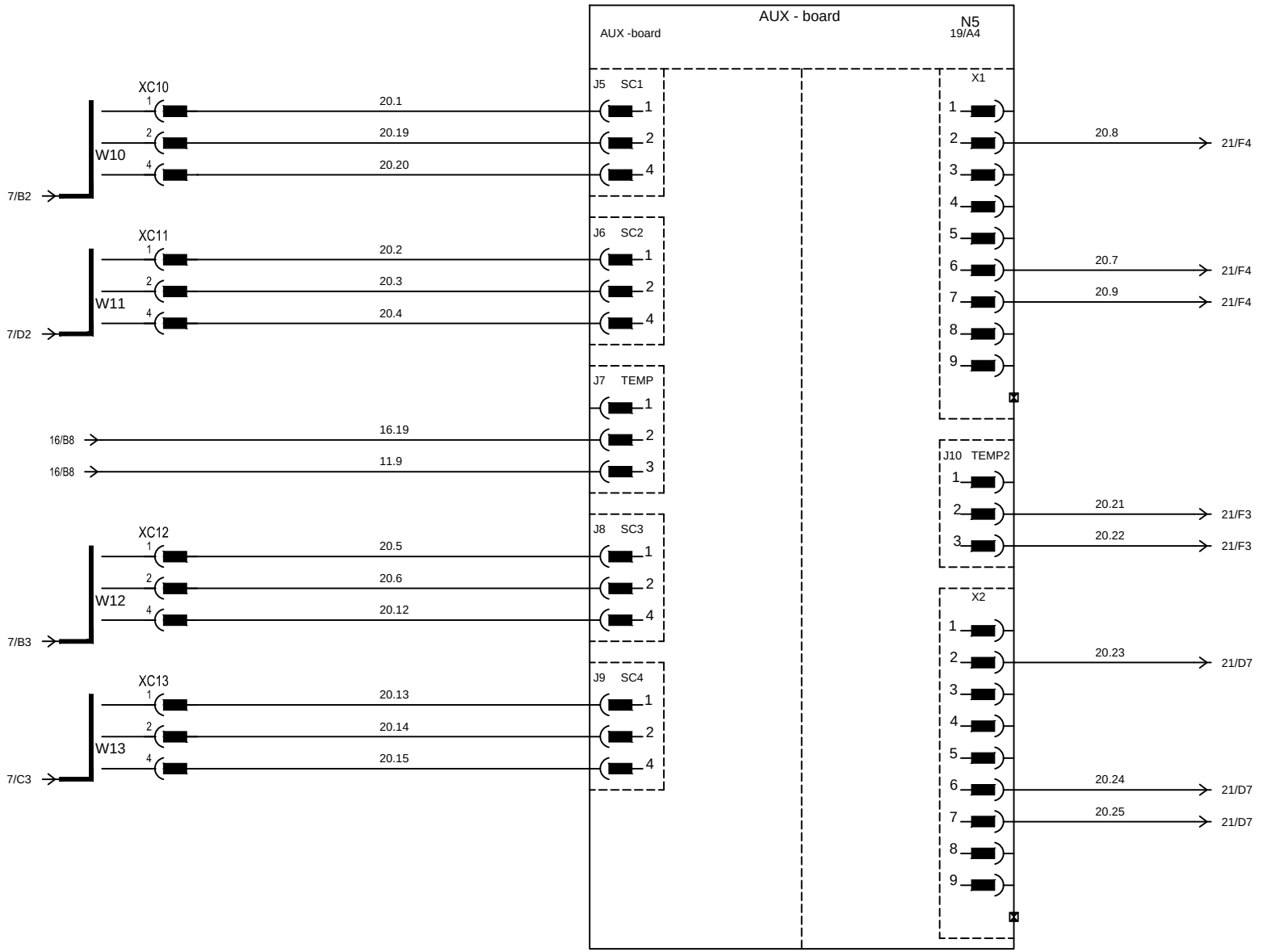

Fili disponibili dal: 20.16

				DATA DATE	04/07/2017
006	AS BUILT UPDATED	11/01/18	CC	DISEGN. DESIGNED	C.CASSANI
005	AS BUILT	21/12/17	CC	CONTROL. CHECKED	S.TENCONI
REV.	MODIFIC.	DATA DATE	FIRMA SIGNATURE	APPROV. APPROVED	G.TADDIA

CLIENTE CUSTOMER: ENEA PROTO-SPHERA

QUESTA COPIA NON E' FIRMATA PERCHE' REGISTRATA E DISTRIBUITA TRAMITE SISTEMA AUTOMATICO DI GESTIONE DEL PATRIMONIO INFORMATIVO (PUO' ESSERE FIRMATA A RICHIESTA)
THIS COPY IS NOT SIGNED SINCE IT IS FILED AND DELIVERED BY MEANS OF THE AUTOMATIC KNOWLEDGE MANAGEMENT SYSTEM (IT CAN BE SIGNED ON REQUEST)
QUESTO DOCUMENTO E' PROPRIETA' RISERVATA DELLA OCEM ENERGY TECHNOLOGY IL SUO CONTENUTO NON PUO' ESSERE DIVULGATO NE' MODIFICATO SENZA IL CONSENSO SCRITTO DELLA OCEM ENERGY TECHNOLOGY
THIS DOCUMENT BELONGS TO OCEM ENERGY TECHNOLOGY ITS CONTENT CANNOT BE DIVULGED OR MODIFIED WITHOUT WRITTEN APPROVAL OF OCEM ENERGY TECHNOLOGY

OCEM® CSQ UNI EN ISO 9001 Cert. 9115 OCEM

OGGETTO SUBJECT: PULSED POWER SUPPPLY 2000 A 300 VDC
AUX BOARD CONNECTION

DISEGNO N. DRAWING N.: 078.5307.0

FORM. S.SIZE: A3

FOGLIO SHEET: 20 DI OF 25

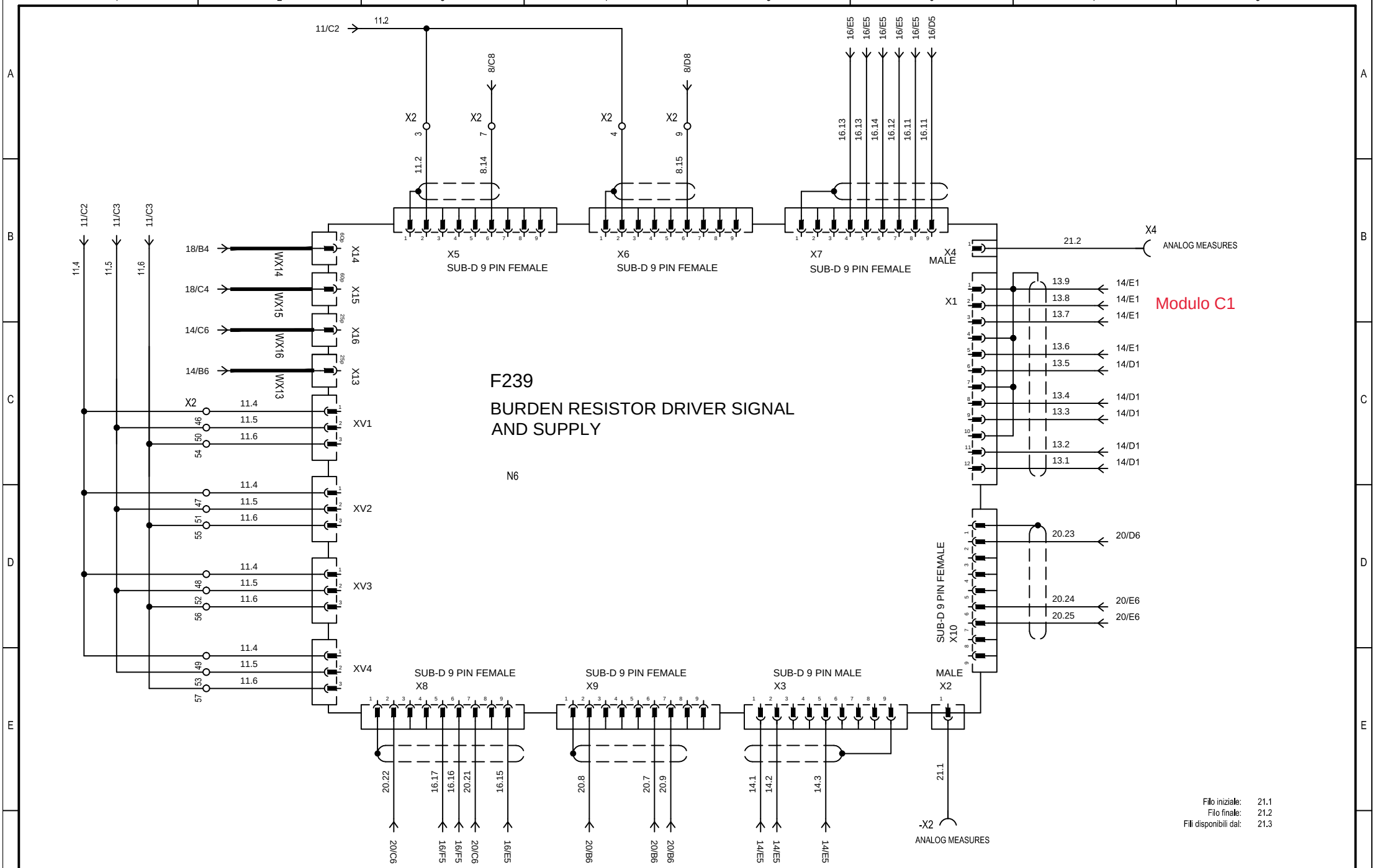

				DATA DATE	04/07/2017
006	AS BUILT UPDATED	11/01/18	CC	DISEGN. DESIGNED	C.CASSANI
005	AS BUILT	21/12/17	CC	CONTROL. CHECKED	S.TENCONI
REV.	MODIFIC.	DATA DATE	FIRMA SIGNATURE	APPROV. APPROVED	G.TADDIA

CLIENTE CUSTOMER: ENEA PROTO-SPHERA

QUESTA COPIA NON E' FIRMATA PERCHE' REGISTRATA E DISTRIBUITA TRAMITE SISTEMA AUTOMATICO DI GESTIONE DEL PATRIMONIO INFORMATIVO (PUO' ESSERE FIRMATA A RICHIESTA)
THIS COPY IS NOT SIGNED SINCE IT IS FILED AND DELIVERED BY MEANS OF THE AUTOMATIC KNOWLEDGE MANAGEMENT SYSTEM (IT CAN BE SIGNED ON REQUEST)
QUESTO DOCUMENTO E' PROPRIETA' RISERVATA DELLA OCEM ENERGY TECHNOLOGY IL SUO CONTENUTO NON PUO' ESSERE DIVULGATO NE' MODIFICATO SENZA IL CONSENSO SCRITTO DELLA OCEM ENERGY TECHNOLOGY
THIS DOCUMENT BELONGS TO OCEM ENERGY TECHNOLOGY ITS CONTENT CANNOT BE DIVULGED OR MODIFIED WITHOUT WRITTEN APPROVAL OF OCEM ENERGY TECHNOLOGY

OCEM® CSQ UNI EN ISO 9001 Cert. 9115 OCEM

OGGETTO SUBJECT: PULSED POWER SUPPPLY 2000 A 300 VDC
F239 BOARD CONNECTION

DISEGNO N. DRAWING N.	FORM. S.SIZE	
078.5307.0	A3	
	FOGLIO SHEET	21 DI OF 25

USER TERMINALS Verifica

X2A

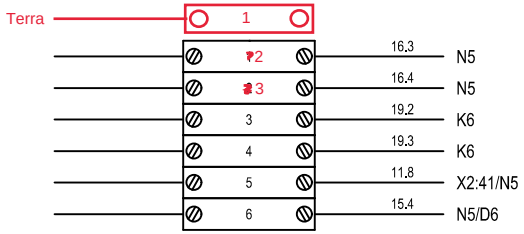

X2A USER TERMINALS	
16.3	EXTERNAL TRIGGER Edge?
16.4	EXTERNAL TRIGGER
19.2	COMMON INTERLOCK
19.3	COMMON INTERLOCK
11.8	EXTERNAL INTERLOCK
15.4	EXTERNAL INTERLOCK

SUPPLIERS TERMINALS

X2B

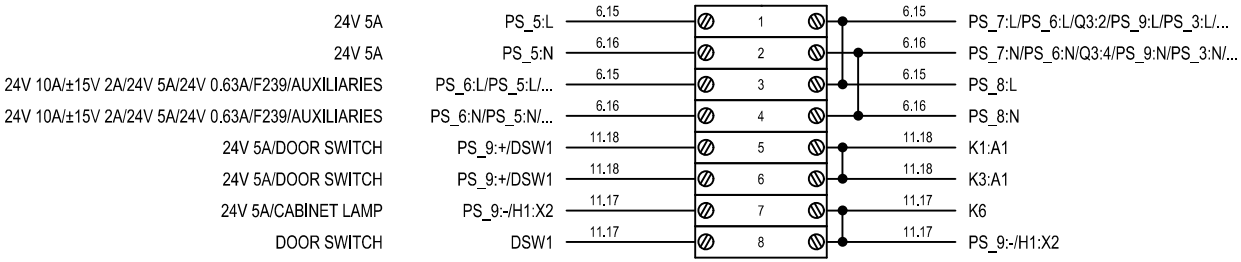

230V TERMINALS

X2C

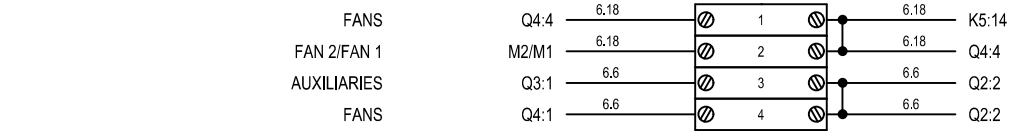

REV.	MODIFIC.	DATA DATE	FIRMA SIGNATURE	APPROV. APPROVED	
006	AS BUILT UPDATED	11/01/18	CC	DISEGN. DESIGNED	C.CASSANI
005	AS BUILT	21/12/17	CC	CONTROL. CHECKED	S.TENCONI
				DATA DATE	04/07/2017
				APPROV. APPROVED	G.TADDIA

CLIENTE CUSTOMER: ENEA PROTO-SPHERA

OCEM® UNI EN ISO 9001 Cert. 9115 OCEM

QUESTA COPIA NON E' FIRMATA PERCHE' REGISTRATA E DISTRIBUITA TRAMITE SISTEMA AUTOMATICO DI GESTIONE DEL PATRIMONIO INFORMATIVO (PUO' ESSERE FIRMATA A RICHIESTA)
THIS COPY IS NOT SIGNED SINCE IT IS FILED AND DELIVERED BY MEANS OF THE AUTOMATIC KNOWLEDGE MANAGEMENT SYSTEM (IT CAN BE SIGNED ON REQUEST)
QUESTO DOCUMENTO E' PROPRIETA' RISERVATA DELLA OCEM ENERGY TECHNOLOGY IL SUO CONTENUTO NON PUO' ESSERE DIVULGATO NE' MODIFICATO SENZA IL CONSENSO SCRITTO DELLA OCEM ENERGY TECHNOLOGY
THIS DOCUMENT BELONGS TO OCEM ENERGY TECHNOLOGY ITS CONTENT CANNOT BE DIVULGED OR MODIFIED WITHOUT WRITTEN APPROVAL OF OCEM ENERGY TECHNOLOGY

OGGETTO SUBJECT: PULSED POWER SUPPPLY 2000 A 300 VDC
TERMINAL BOARDS

DISEGNO N. DRAWING N.: 078.5307.0

FORM. S.SIZE: A3

FOGLIO SHEET: 22 DI OF 25

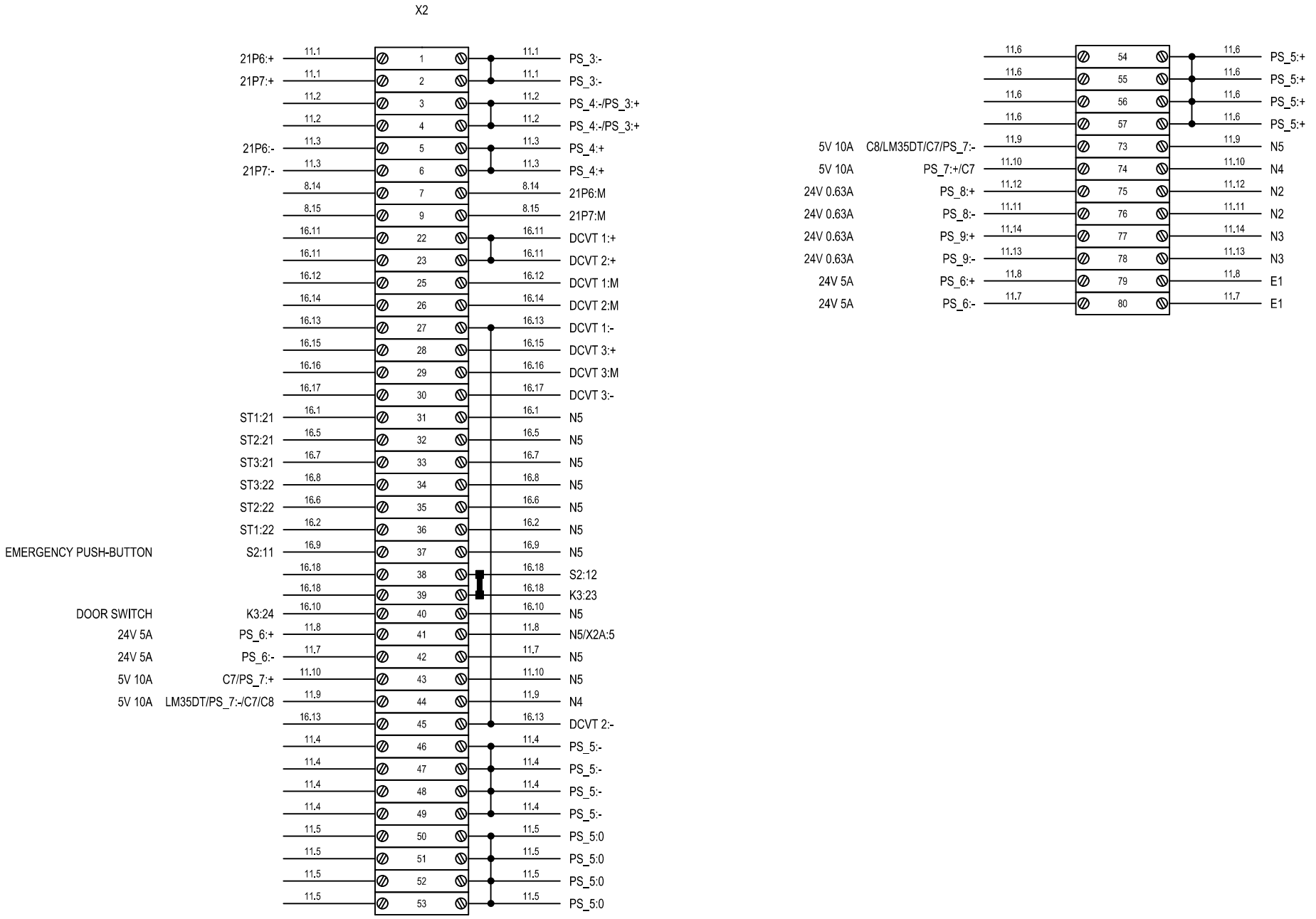

				DATA DATE	04/07/2017	CLIENTE CUSTOMER	QUESTA COPIA NON E' FIRMATA PERCHE' REGISTRATA E DISTRIBUITA TRAMITE SISTEMA AUTOMATICO DI GESTIONE DEL PATRIMONIO INFORMATIVO (PUO' ESSERE FIRMATA A RICHIESTA)	
006	AS BUILT UPDATED	11/01/18	CC	DISEGN. DESIGNED	C.CASSANI	ENEA PROTO-SPHERA	THIS COPY IS NOT SIGNED SINCE IT IS FILED AND DELIVERED BY MEANS OF THE AUTOMATIC KNOWLEDGE MANAGEMENT SYSTEM (IT CAN BE SIGNED ON REQUEST)	
005	AS BUILT	21/12/17	CC	CONTROL. CHECKED	S.TENCONI		QUESTO DOCUMENTO E' PROPRIETA' RISERVATA DELLA OCEM ENERGY TECHNOLOGY IL SUO CONTENUTO NON PUO' ESSERE DIVULGATO NE' MODIFICATO SENZA IL CONSENSO SCRITTO DELLA OCEM ENERGY TECHNOLOGY	
REV.	MODIFIC.	DATA DATE	FIRMA SIGNATURE	APPROV. APPROVED	G.TADDIA	OCEM®	THIS DOCUMENT BELONGS TO OCEM ENERGY TECHNOLOGY ITS CONTENT CANNOT BE DIVULGED OR MODIFIED WITHOUT WRITTEN APPROVAL OF OCEM ENERGY TECHNOLOGY	

UNI EN ISO 9001 Cert. 9115 OCEM

OGGETTO SUBJECT: PULSED POWER SUPPPLY 2000 A 300 VDC TERMINAL BOARDS

DISEGNO N. DRAWING N. 078.5307.0 | FORM. S.SIZE A3 | FOGLIO SHEET 23 DI OF 25

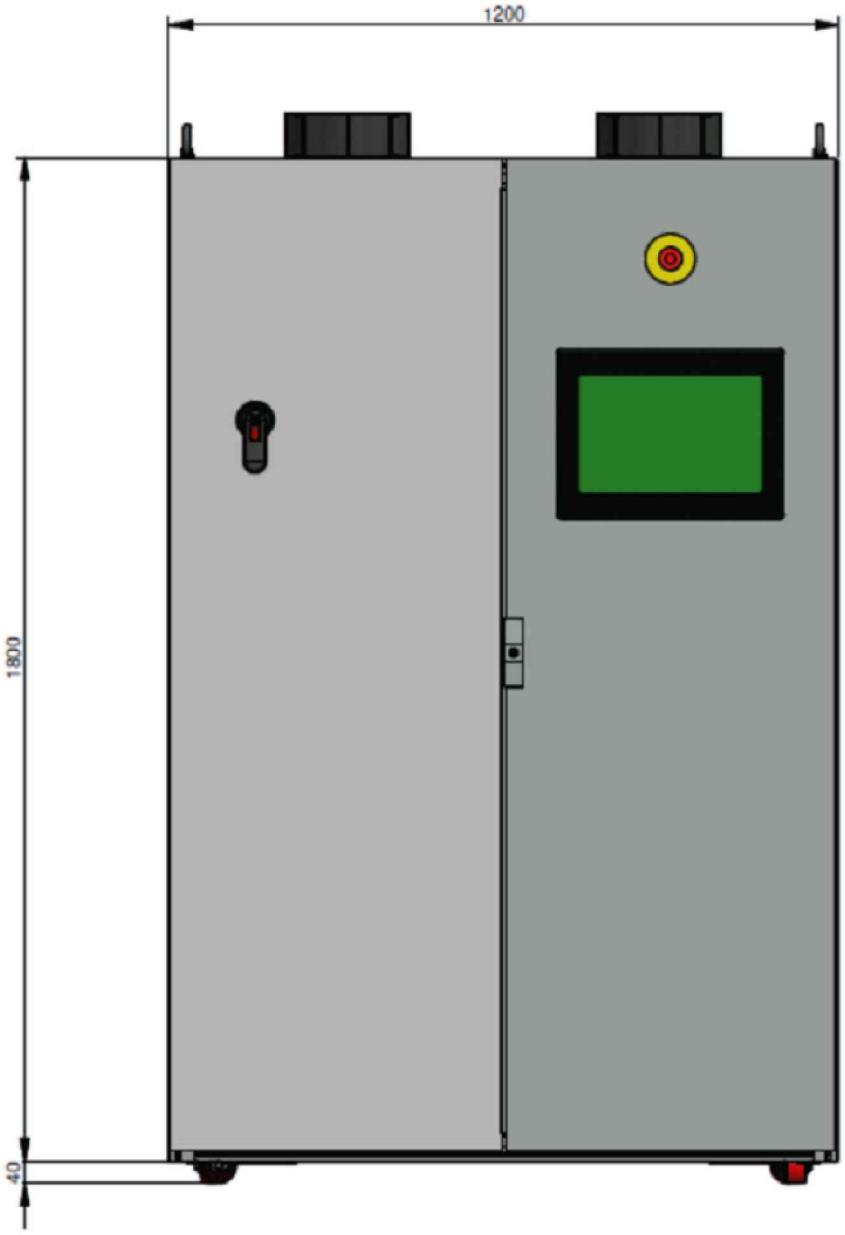



In di/dt pulse e in arbitrary prende solo numeri interi senza avvisare

Quando gli impulsi sono corti, ne fa due

				DATA DATE	04/07/2017
006	AS BUILT UPDATED	11/01/18	CC	DISEGN. DESIGNED	C.CASSANI
005	AS BUILT	21/12/17	CC	CONTROL. CHECKED	S.TENCONI
REV.	MODIFIC.	DATA DATE	FIRMA SIGNATURE	APPROV. APPROVED	G.TADDIA

CLIENTE CUSTOMER: ENEA PROTO-SPHERA

OCEM® CSQ UNI EN ISO 9001 Cert. 9115 OCEM

QUESTA COPIA NON E' FIRMATA PERCHE' REGISTRATA E DISTRIBUITA TRAMITE SISTEMA AUTOMATICO DI GESTIONE DEL PATRIMONIO INFORMATIVO (PUO' ESSERE FIRMATA A RICHIESTA)
THIS COPY IS NOT SIGNED SINCE IT IS FILED AND DELIVERED BY MEANS OF THE AUTOMATIC KNOWLEDGE MANAGEMENT SYSTEM (IT CAN BE SIGNED ON REQUEST)
QUESTO DOCUMENTO E' PROPRIETA' RISERVATA DELLA OCEM ENERGY TECHNOLOGY IL SUO CONTENUTO NON PUO' ESSERE DIVULGATO NE' MODIFICATO SENZA IL CONSENSO SCRITTO DELLA OCEM ENERGY TECHNOLOGY
THIS DOCUMENT BELONGS TO OCEM ENERGY TECHNOLOGY ITS CONTENT CANNOT BE DIVULGED OR MODIFIED WITHOUT WRITTEN APPROVAL OF OCEM ENERGY TECHNOLOGY

OGGETTO SUBJECT: PULSED POWER SUPPPLY 2000 A 300 VDC
EXTERNAL LAYOUT

DISEGNO N. DRAWING N.: 078.5307.0

FORM. S.SIZE: A3

FOGLIO SHEET: 24 DI OF 25

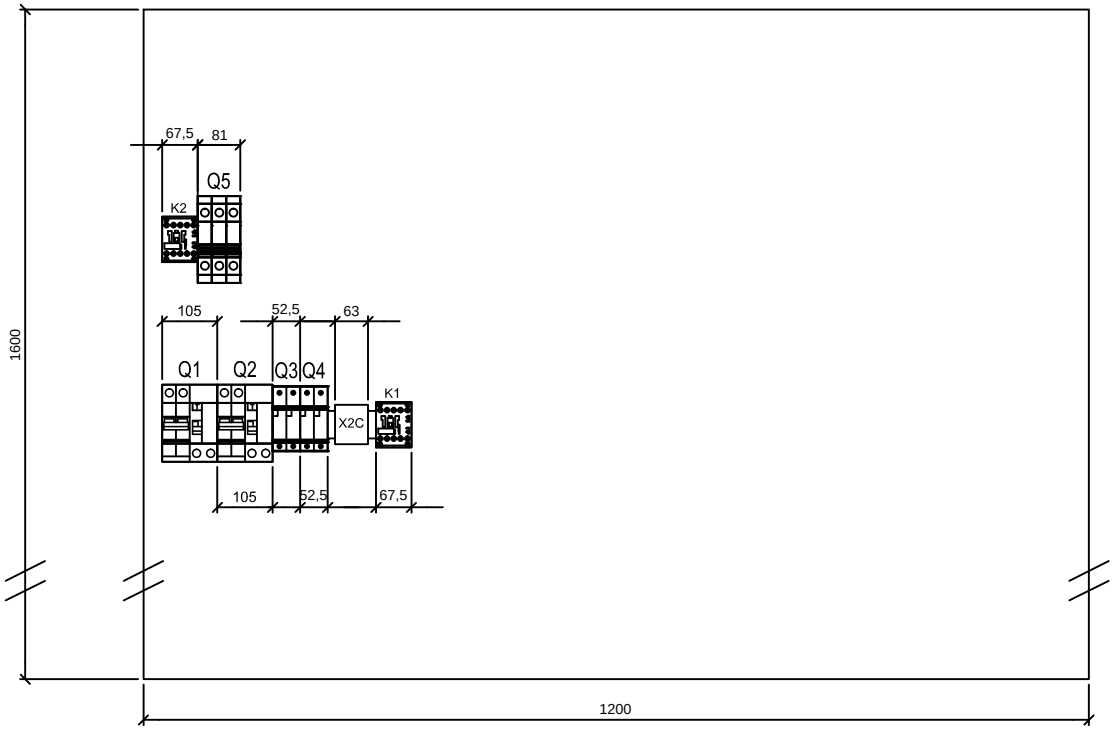

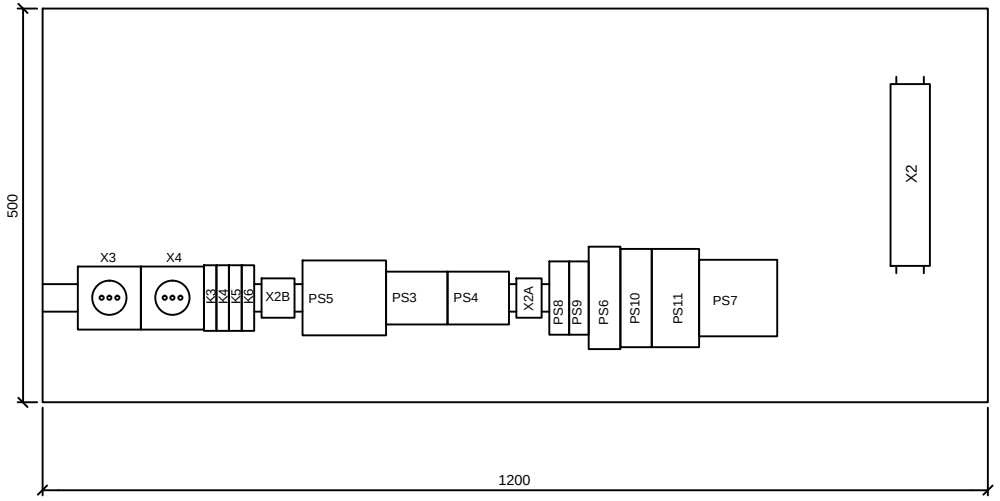

BOTTOM
SIDE

SCALE 1:6.7

				DATA DATE	04/07/2017	CLIENTE CUSTOMER	QUESTA COPIA NON E' FIRMATA PERCHE' REGISTRATA E DISTRIBUITA TRAMITE SISTEMA AUTOMATICO DI GESTIONE DEL PATRIMONIO INFORMATIVO (PUO' ESSERE FIRMATA A RICHIESTA) THIS COPY IS NOT SIGNED SINCE IT IS FILED AND DELIVERED BY MEANS OF THE AUTOMATIC KNOWLEDGE MANAGEMENT SYSTEM (IT CAN BE SIGNED ON REQUEST) QUESTO DOCUMENTO E' PROPRIETA' RISERVATA DELLA OCEM ENERGY TECHNOLOGY IL SUO CONTENUTO NON PUO' ESSERE DIVULGATO NE' MODIFICATO SENZA IL CONSENSO SCRITTO DELLA OCEM ENERGY TECHNOLOGY THIS DOCUMENT BELONGS TO OCEM ENERGY TECHNOLOGY ITS CONTENT CANNOT BE DIVULGED OR MODIFIED WITHOUT WRITTEN APPROVAL OF OCEM ENERGY TECHNOLOGY		
006	AS BUILT UPDATED	11/01/18	CC	DISEGN. DESIGNED	C.CASSANI	ENEA PROTO-SPHERA		
005	AS BUILT	21/12/17	CC	CONTROL. CHECKED	S.TENCONI			
REV.	MODIFIC.	DATA DATE	FIRMA SIGNATURE	APPROV. APPROVED	G.TADDIA	OCEM®	UNI EN ISO 9001 Cert. 9115 OCEM	OGGETTO SUBJECT: PULSED POWER SUPPPLY 2000 A 300 VDC INTERNAL LAYOUT

DISEGNO N. DRAWING N.	FORM. S.SIZE	A3	
078.5307.0	FOGLIO SHEET	25 DI OF	25